QuCube for Robustel R3000 Lite

INTEGRATED MULTI-BAND LTE & 5G OMNI ANTENNA + PASSIVE POE SPLITTER + PLACE TO INSTALL ROBUSTEL R3000 Lite (ALL-IN-ONE)

QuCube for Robustel R3000 Lite is a revolutionary outdoor antenna solution that combines minimized dimensions with exceptional antenna performance. Designed specifically as an **antenna for Robustel R3000 Lite router**, it delivers reliable, high-speed wireless connectivity in even the most demanding environments.
This all-in-one unit integrates high-gain omnidirectional **5G antennas** with Robustel routers into a compact, rugged **IP68-rated waterproof enclosure**. The integration reduces installation complexity while enabling rapid deployment of advanced outdoor 5G solutions.
Engineered for outdoor and mobile applications, **QuCube** is ideal for use in transportation systems, for underground connectivity or urban and public installations. It ensures consistent performance wherever dependable connectivity is essential.
The set contains a Passive PoE splitter, allowing you to split data and power from a single Ethernet cable and maintain gigabit transfer speeds while protecting the LAN port from damage caused by overvoltage, short circuit or improper connection. **NOTE:** should only be used with a 24V (or lower voltage) Passive PoE power supply it is not compatible with an 802.3af/at power source!





5G/LTE SPECIFICATION

FREQUENCY	0.58 - 2.0 GHz 2.0 - 3.5 GHz 3.5 - 5.0 GHz 5.0 - 6.35 GHz
MAX. GAIN	0.58 - 2.0 GHz : 2 dBi 2.0 - 3.5 GHz : 3.2 dBi 3.5 - 5.0 GHz : 3.1 dBi 5.0 - 6.35 GHz : 3.8 dBi
SUPPORTED LTE BANDS	1, 2, 3, 4, 5, 6, 7, 8, 9, 10, 11, 12, 13, 14, 17, 18, 19, 20, 21, 22, 23, 24, 25, 26, 27, 28, 29, 30, 32, 33, 34, 35, 36, 37, 38, 39, 40, 41, 42, 43, 44, 45, 46, 47, 48, 49, 50, 51, 52, 53, 54, 65, 66, 67, 68, 69, 70, 71, 74, 75, 76, 85, 103, 106, 107, 111, 252, 253, 254, 255, 256
SUPPORTED 5G BANDS	n1, n2, n3, n5, n7, n8, n12, n13, n14, n18, n20, n24, n25, n26, n28, n29, n30, n34, n38, n39, n40, n41, n46, n47, n48, n50, n51, n53, n54, n65, n66, n67, n68, n70, n71, n74, n75, n76, n77, n78, n79, n80, n81, n82, n83, n84, n85, n86, n89, n90, n91, n92, n93, n94, n95, n97, n98, n99, n100, n101, n105, n106, n109, n110, n250, n251, n252, n253, n254, n255, n256
VSWR	<2.50, max <3.00
BEAMWIDTH	360°/35° ±5°
POLARIZATION	Vertical
IMPEDANCE	50 Ω

Copyright © 2023, Wireless Instruments. Specifications and information given in this document are subject to change without prior notice.

MECHANICAL SPECIFICATION

MATERIAL	ASA
CONNECTOR	QuRJ45
OUTER DIMENSIONS	160 x 160 x 155 mm 6.3 x 6.3 x 6.10 inch
WEIGHT	1.5 kg
OPERATING TEMPERATURE	-40°C to 80°C -40°F to 176°F
INGRESS PROTECTION	IP67 and IP68

MOUNTING KIT

MATERIAL	Galvanized steel
WEIGHT	0.4kg
MOUNTING PLACE	Wall or mast
MAST DIAMETER	25-66 mm 0.98-2.60 inch

Copyright © 2023, Wireless Instruments. Specifications and information given in this document are subject to change without prior notice.

PLOTS

5G/LTE VSWR

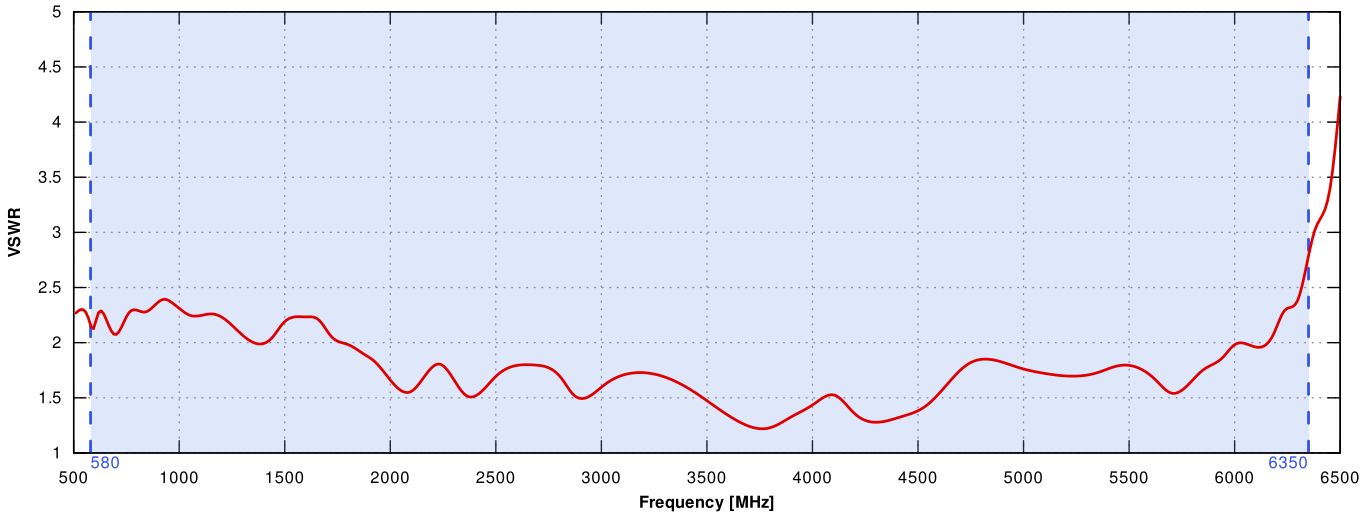

5G/LTE GAIN

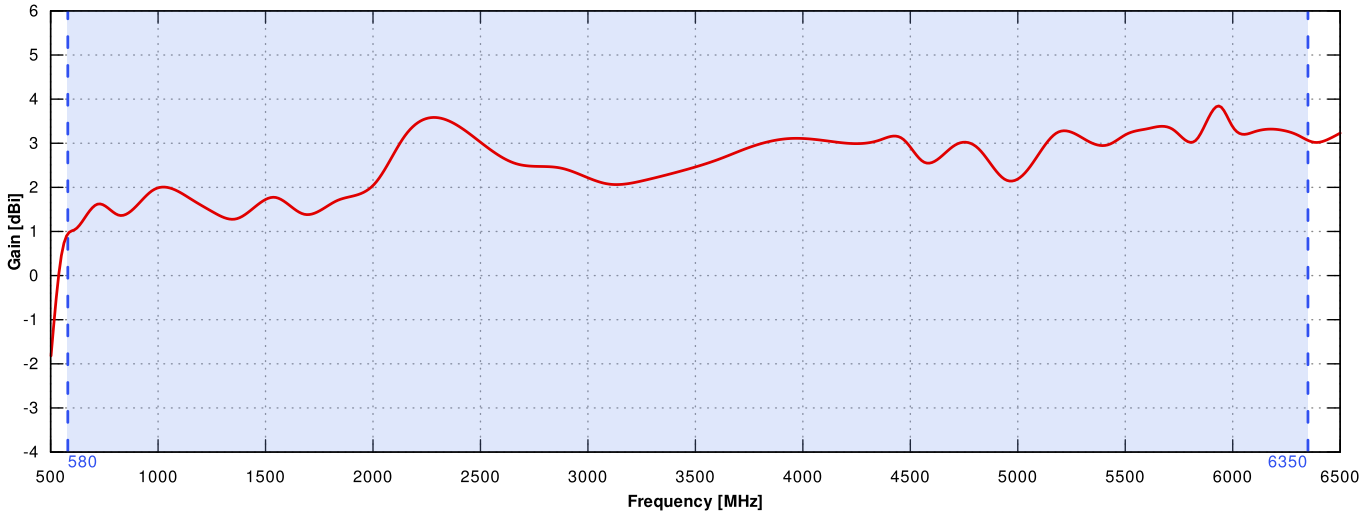

Copyright © 2023, Wireless Instruments. Specifications and information given in this document are subject to change without prior notice.

5G/LTE from 617MHz to 960MHz

ELEVATION

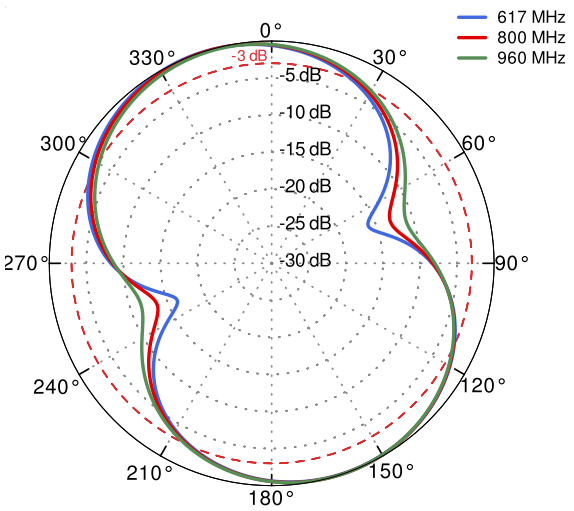

AZIMUTH

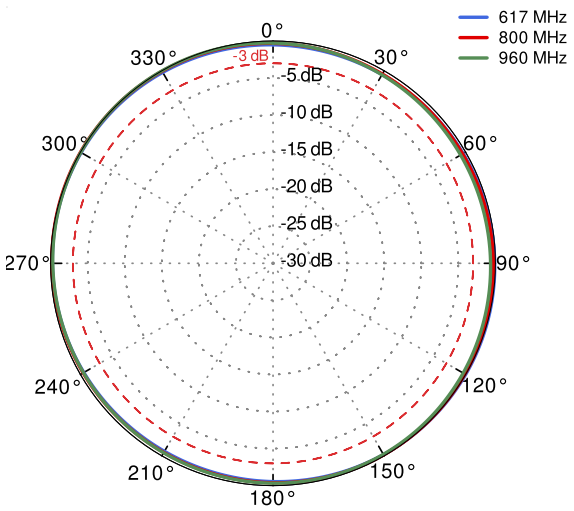

5G/LTE from 1.71GHz to 2.5GHz

ELEVATION

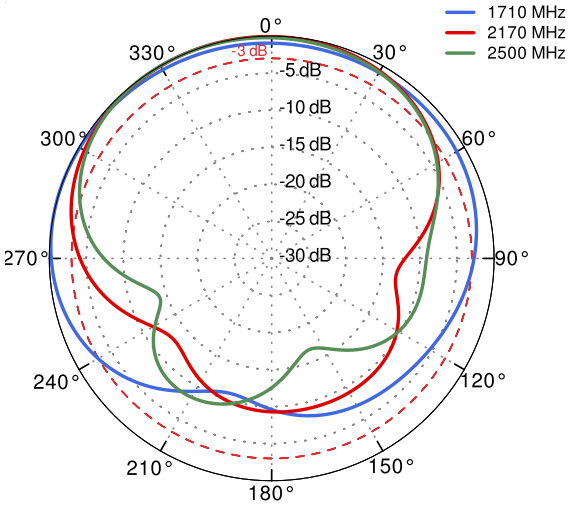

AZIMUTH

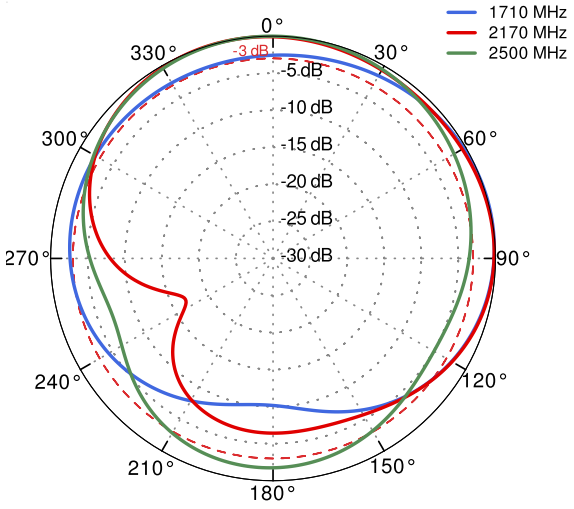

Copyright © 2023, Wireless Instruments. Specifications and information given in this document are subject to change without prior notice.

5G/LTE from 3.3GHz to 4.2GHz

ELEVATION

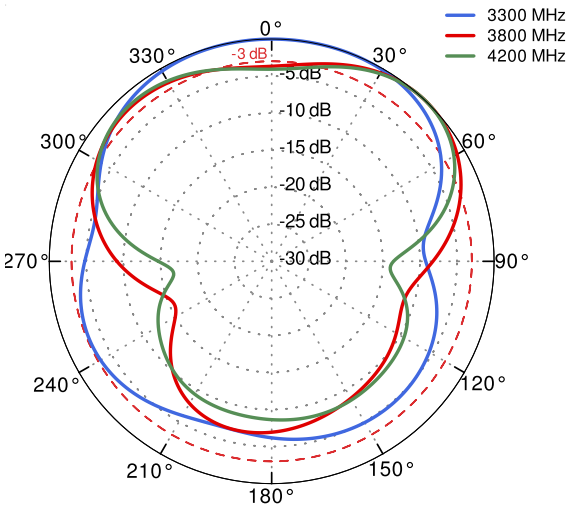

AZIMUTH

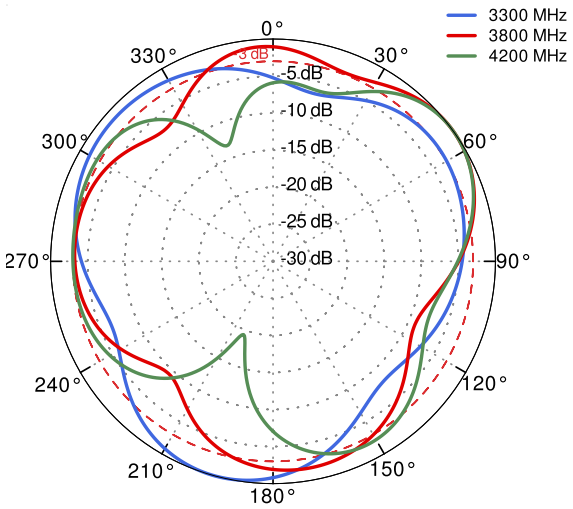

5G/LTE from 4.8GHz to 5.8GHz

ELEVATION

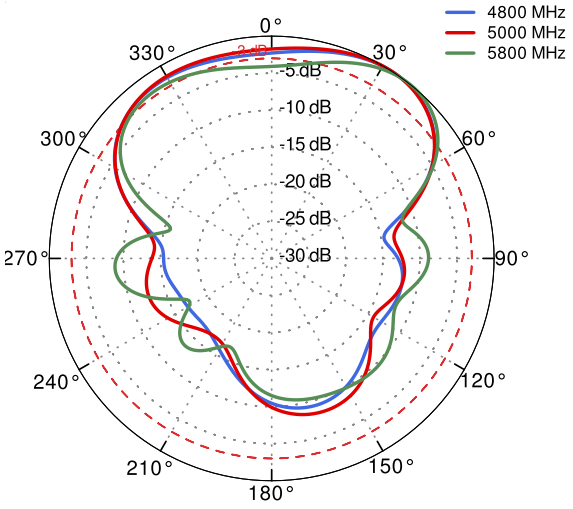

AZIMUTH

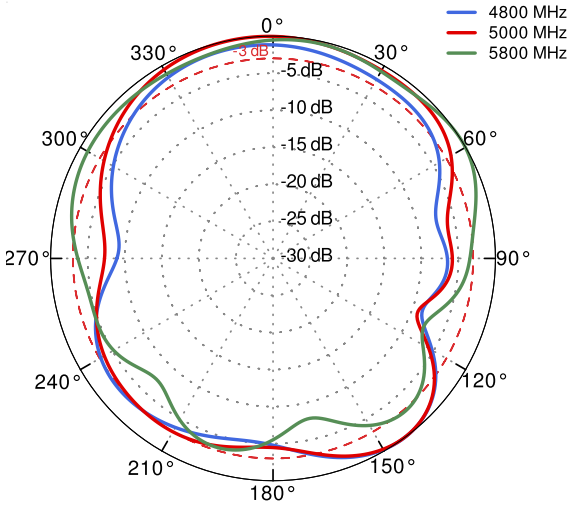

Copyright © 2023, Wireless Instruments. Specifications and information given in this document are subject to change without prior notice.

DIMENSIONS

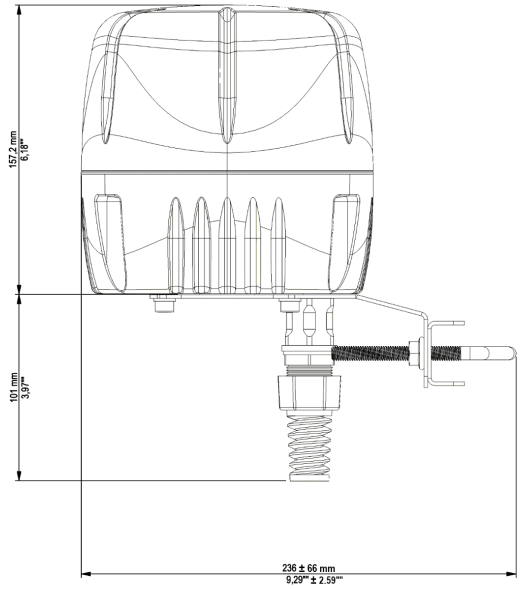

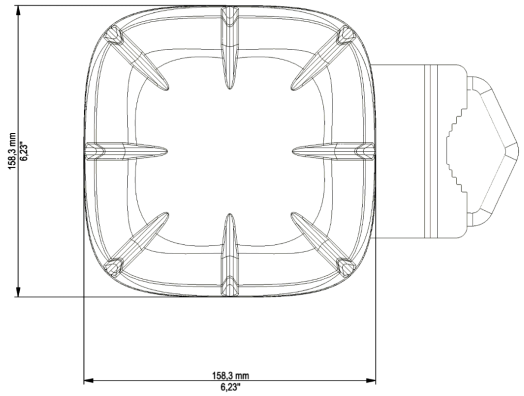

WWW.QUWIRELESS.COM

Sales email: sales@quwireless.com **Tel:** +48 513 900 416

Support email: support@quwireless.com **Website:** www.quwireless.com

Address: Wireless Instruments Sp. z o.o., ul. Kościuszki 27, 52-116 Iwiny, Poland

Copyright © 2023, Wireless Instruments. Specifications and information given in this document are subject to change without prior notice.