QuMax for Teltonika RUTX10

QuMAX offers the most powerful Wi-Fi dual band 2.4 & 5 GHz sector antenna of all QuWireless antennas. It is dedicated to hotspots and fixed networks base stations with big coverage. It is designed to have Teltonika RUTX10 router installed inside IP67 enclosure. It is the first choice for fixed installations in industrial environment. It has embedded also Bluetooth sector antenna.

QuMAX offers the most powerful Wi-Fi dual band 2.4 & 5 GHz sector antenna of all QuWireless antennas. It is dedicated to hotspots and fixed networks base stations with big coverage. It is designed to have Teltonika **RUTX10** router installed inside IP67 enclosure. It is the first choice for fixed installations in industrial environment. It has embedded also Bluetooth sector antenna.
This product is also compatible with **RUTM10.** If used with RUTM10, the Bluetooth antenna is unused.

Wi Fi DUALBAND 2.4GHz 5GHz | 2.4GHz + 5GHz 6GHz + 7GHz | 14 dBi | BLUETOOTH | DIRECTIONAL | IP 67 | -40° TO +80°

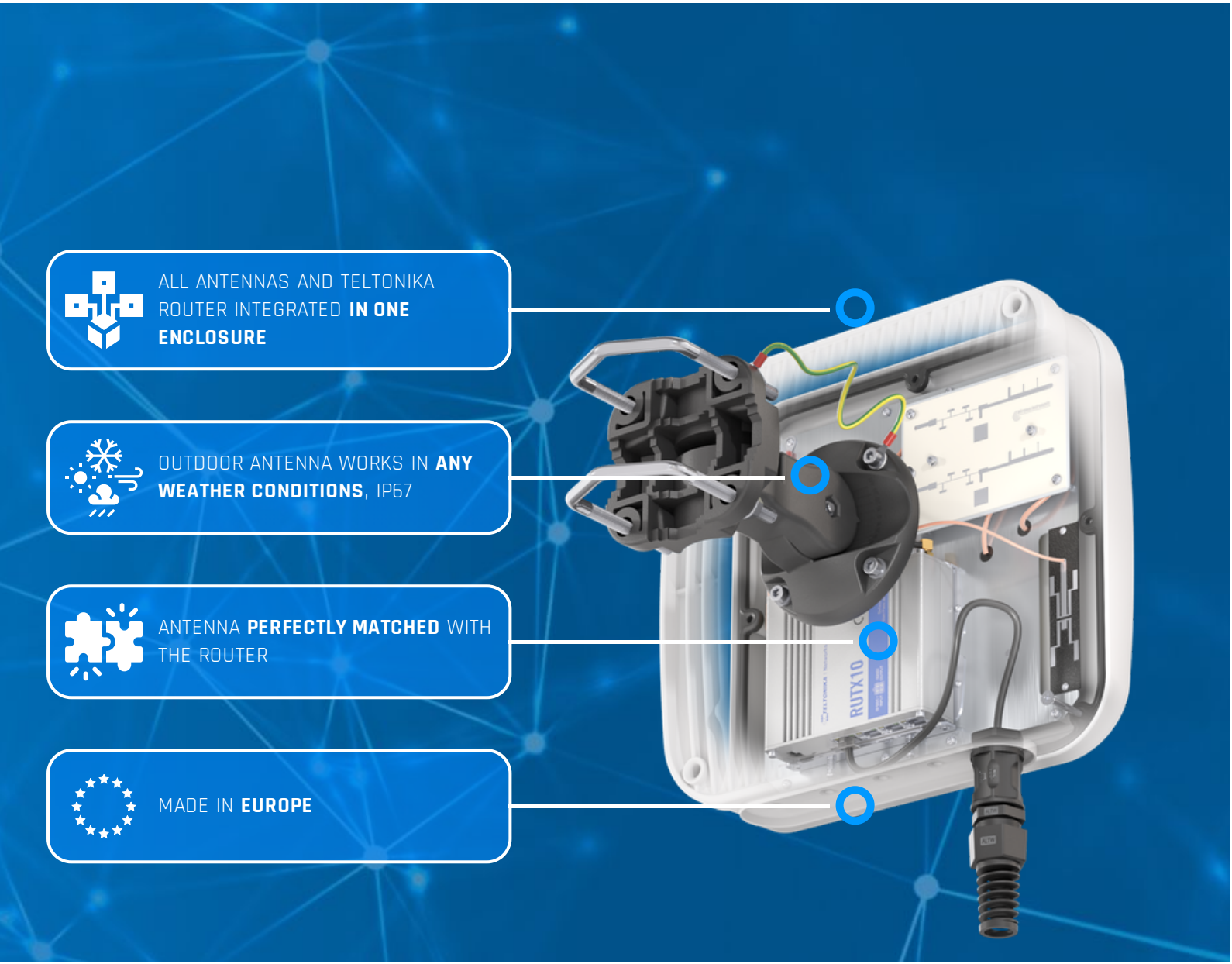

WI-FI ANTENNA SPECIFICATION

FREQUENCY	2.4 – 2.5 GHz 5.1 – 7.125 GHz
GAIN	2.4 – 2.5 GHz : 12 dBi 5.1 – 7.125 GHz : 14 dBi
VSWR	< 2.00
BEAMWIDTH	2.4 - 2.5 GHz - 90°/30° ±5° 5.1 - 7.125 GHz - 90°/16° ±5°
POLARIZATION	Horizontal Vertical
IMPEDANCE	50 Ω
FRONT-TO-BACK	> 20 dB > 25 dB

BLUETOOTH ANTENNA SPECIFICATION

FREQUENCY	2.30 - 2.60 GHz
GAIN	3 dBi
VSWR	<1.70, max <2.00
BEAMWIDTH	360°/25° ±5°
POLARIZATION	Vertical
IMPEDANCE	50 Ω

Copyright © 2023, Wireless Instruments. Specifications and information given in this document are subject to change without prior notice.

MECHANICAL SPECIFICATION

RADOME MATERIAL	UV-resistant ASA
OPERATING HUMIDITY	up to 100% RH
MATERIALS	aluminum, PTFE, Fiberglass
CONNECTOR TYPE	RJ45
INGRESS PROTECTION	IP67
DIMENSIONS	272 x 276 x 96 mm 10.71 x 10.87 x 3.78 inch
WEIGHT	1.8 kg 3.97 lbs
OPERATING TEMPERATURE	From -40°C to 80°C From -40°F to 176°F
ENCLOSURE RECOMMENDED TIGHTENING TORQUE	0.6 - 0.8 Nm
MAST DIAMETER	25-66mm 0.98-2.60 inch

Copyright © 2023, Wireless Instruments. Specifications and information given in this document are subject to change without prior notice.

PLOTS

VSWR

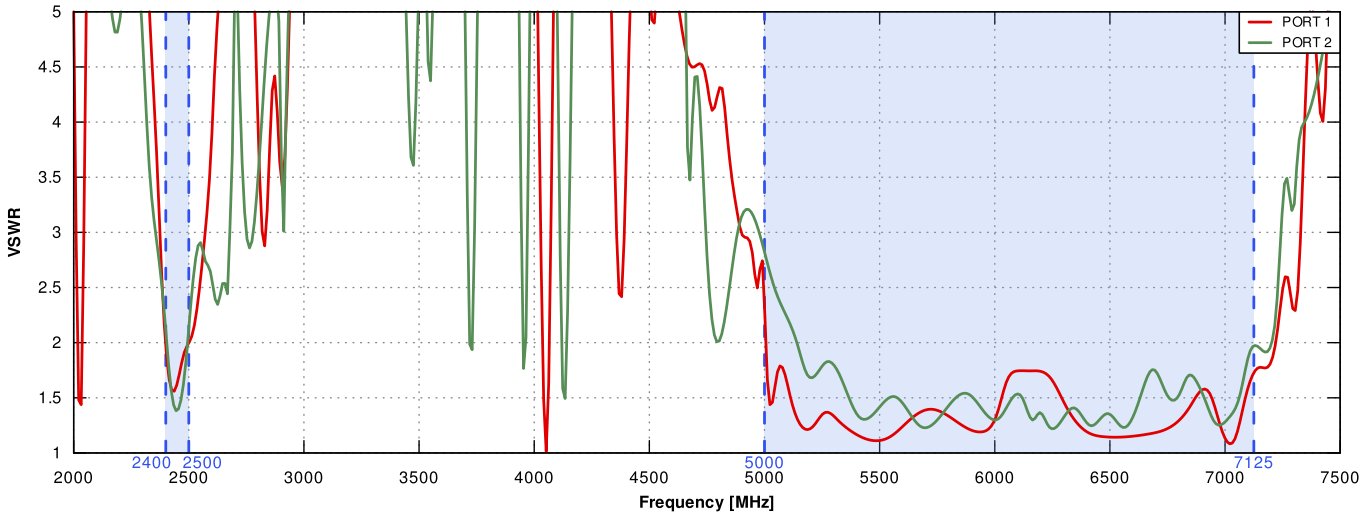

GAIN

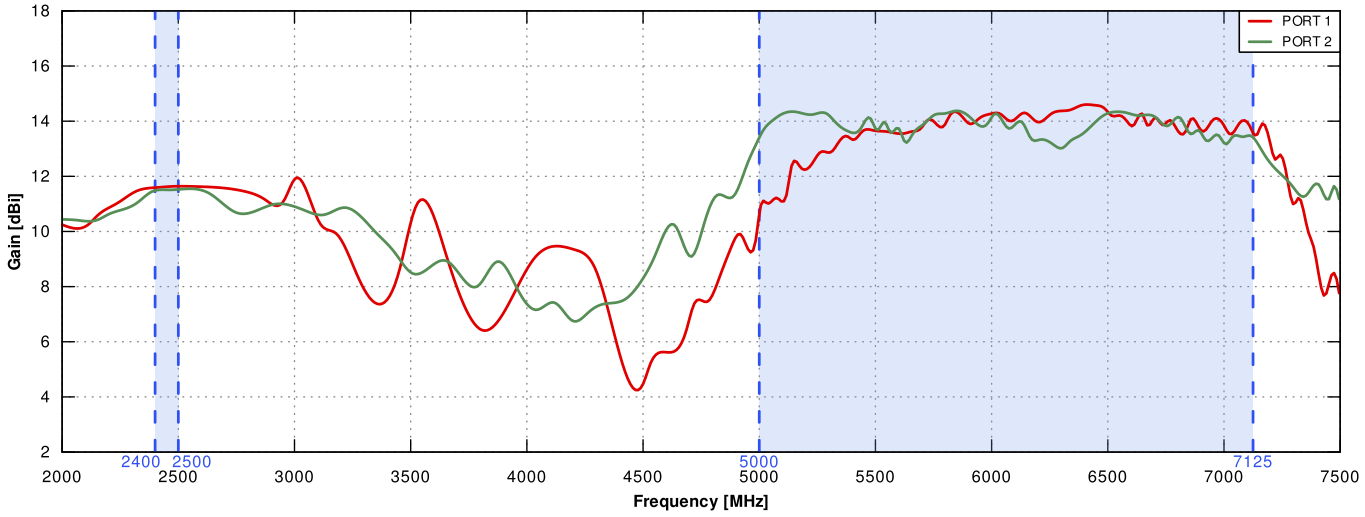

Copyright © 2023, Wireless Instruments. Specifications and information given in this document are subject to change without prior notice.

Wi-Fi from 2.4GHz to 2.5GHz

PORT 1 ELEVATION

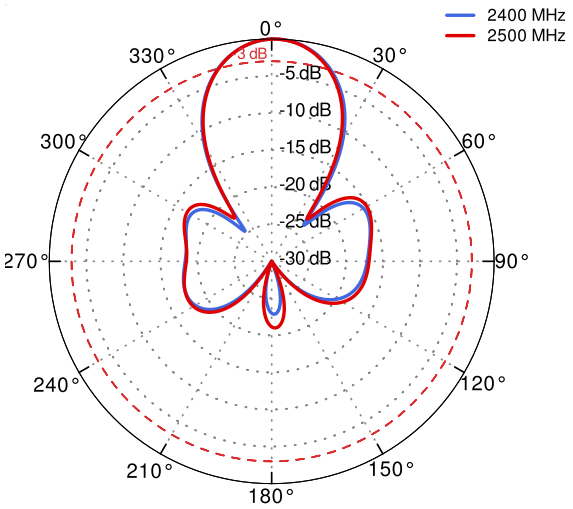

PORT 1 AZIMUTH

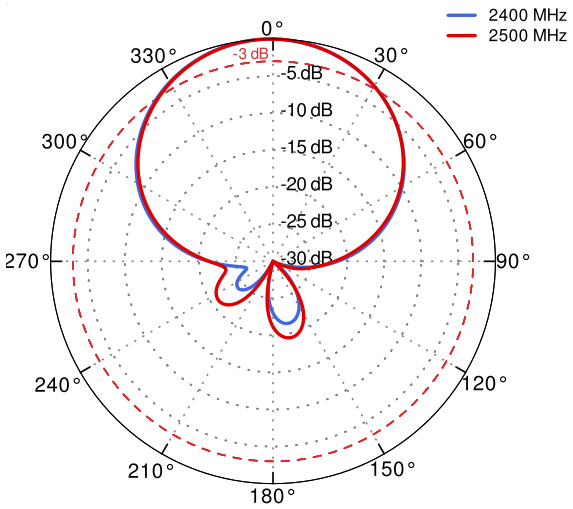

Wi-Fi from 5.1GHz to 6.9 GHz

PORT 1 ELEVATION

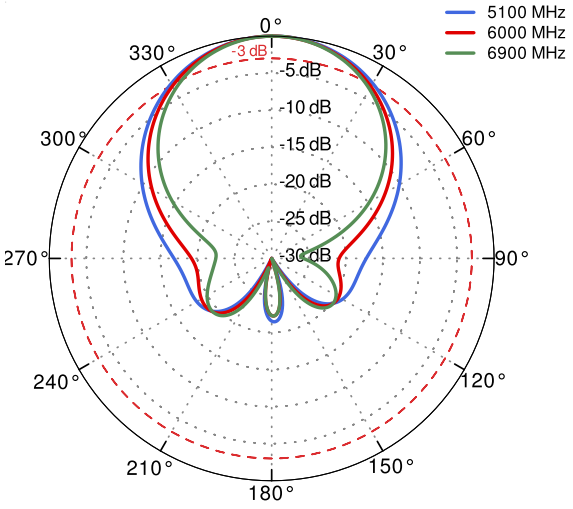

PORT 1 AZIMUTH

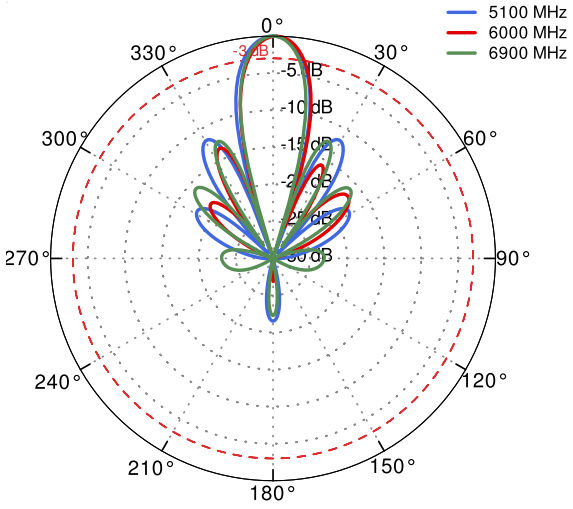

Copyright © 2023, Wireless Instruments. Specifications and information given in this document are subject to change without prior notice.

Wi-Fi from 2.4GHz to 2.5GHz

PORT 2 ELEVATION

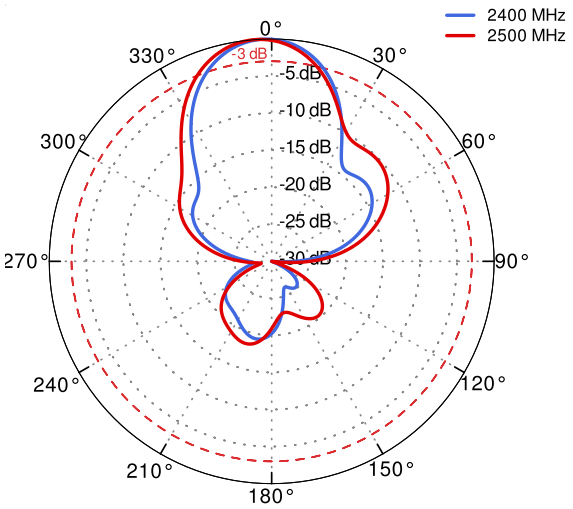

PORT 2 AZIMUTH

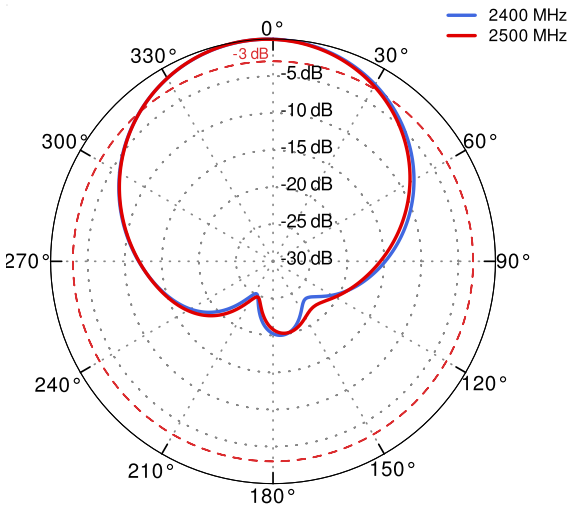

Wi-Fi from 5.1GHz to 6.9GHz

PORT 2 ELEVATION

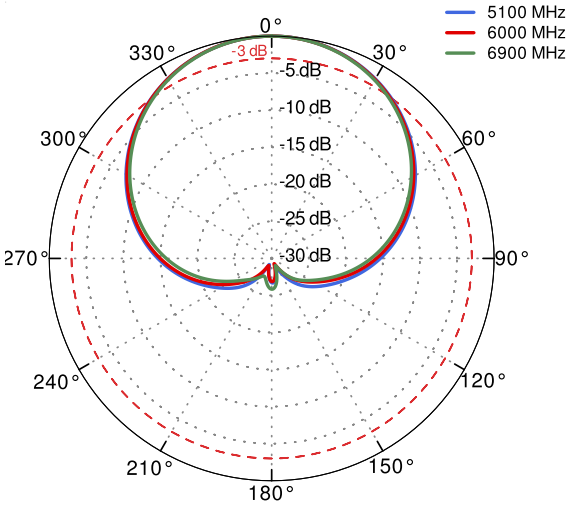

PORT 2 AZIMUTH

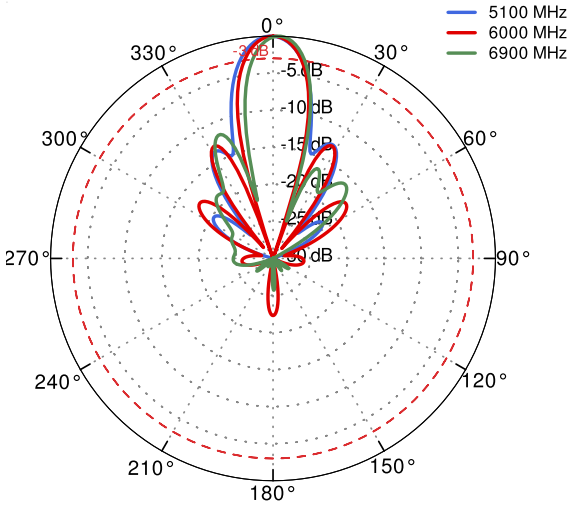

Copyright © 2023, Wireless Instruments. Specifications and information given in this document are subject to change without prior notice.

DIMENSIONS

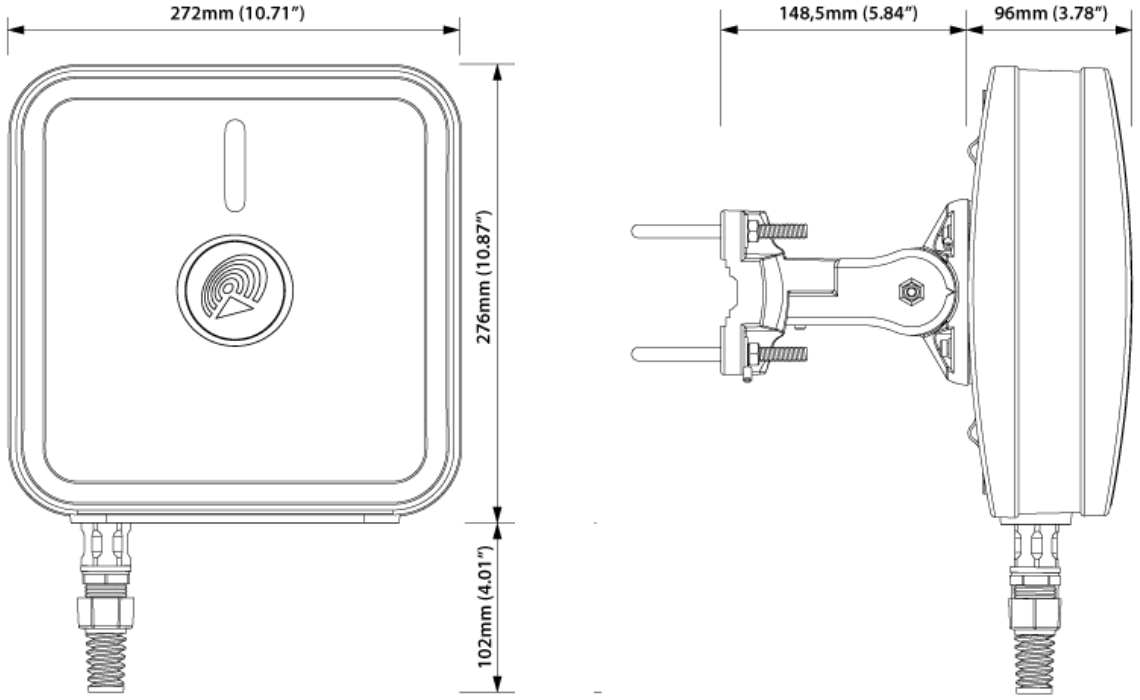

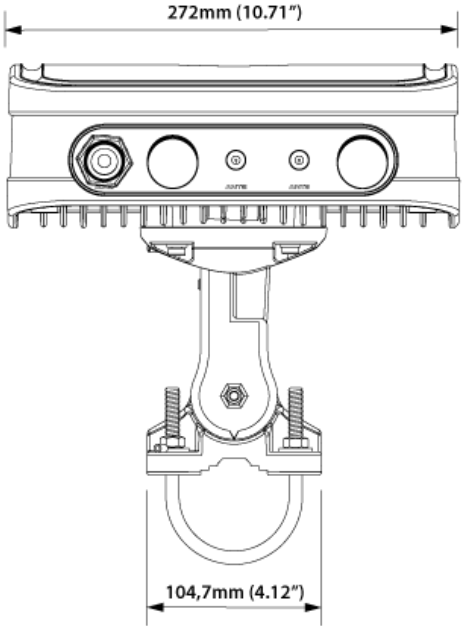

QuWireless
WWW.QUWIRELESS.COM
Sales email: sales@quwireless.com **Tel:** +48 513 900 416
Support email: support@quwireless.com **Website:** www.quwireless.com
Address: Wireless Instruments Sp. z o.o., ul. Kościuszki 27, 52-116 Iwiny, Poland

Copyright © 2023, Wireless Instruments. Specifications and information given in this document are subject to change without prior notice.