QuOmni 5G/LTE Global MIMO 4x4 Nf

Omnidirectional ultra wideband 5G/LTE MIMO 4x4 antenna

QuOmni 5G/LTE omnidirectional MIMO 4x4 is ultra wideband LTE Outdoor antenna. It´s primary designed for LTE/5G/3G/2G devices which require high efficiency connections. The antenna covers many LTE bands including the new Extended LTE Band 71, frequencies: **617 - 6000MHz**. The mounting bracket allows the antenna to be installed on the buildings (on the pole or on the wall) as the client antenna or on the moving points like trains, buses, lorries, yachts, boats to receive Internet by LTE/5G/3G/2G. It's ideal solution to use with all industrial and domestic 4x4 LTE modems and routers like: Teltonika, DIGI, Mikrotik, Robustel, Cisco, etc.

5G | BAND 71 | 4x4 MIMO | 617-6000MHz | 4 dBi | OMNI DIRECTIONAL | IP 68 | -40° TO +80°

- WIDE BAND 600-6000MHZ, 5G TECHNOLOGY
- GALVANIZED STEEL, WALL OR POLE MOUNTING BRACKET
- FOUR NF CONNECTORS
- 360° BEAMWIDTH
- 4.5DBI GAIN
- MADE IN **EUROPE**

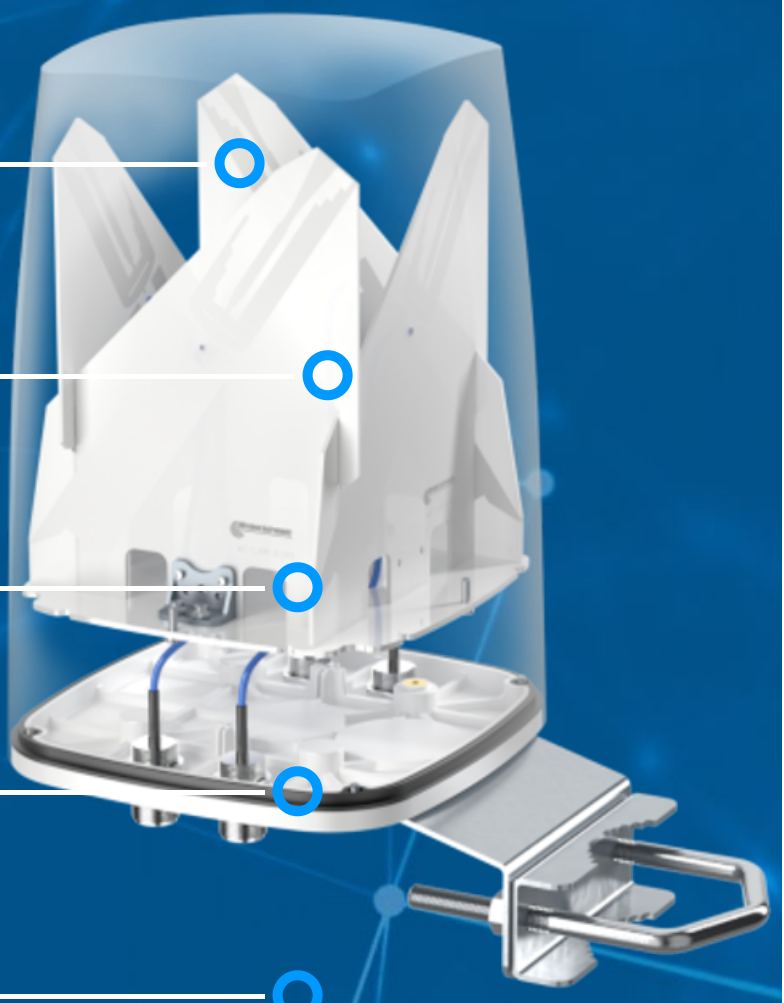

5G / LTE ANTENNA SPECIFICATION

FREQUENCY	0.617 - 0.960 GHz 1.6 - 3.0 GHz 3.0 - 5.0 GHz 5.0 - 6.0 GHz
MAX. GAIN	0.617 - 0.960 GHz : 2 dBi 1.6 - 3.0 GHz : 4 dBi 3.0 - 5.0 GHz : 4 dBi 5.0 - 6.0 GHz : 2 dBi
SUPPORTED LTE BANDS	1, 2, 3, 4, 5, 6, 7, 8, 9, 10, 12, 13, 14, 17, 18, 19, 20, 22, 23, 25, 26, 27, 28, 29, 30, 33, 34, 35, 36, 37, 38, 39, 40, 41, 42, 43, 44, 46, 47, 48, 49, 52, 53, 54, 65, 66, 67, 68, 69, 70, 71, 85, 103, 106, 111, 252, 254, 256
SUPPORTED 5G BANDS	n1, n2, n3, n5, n7, n8, n12, n13, n14, n18, n20, n25, n26, n28, n29, n30, n34, n38, n39, n40, n41, n46, n47, n48, n53, n54, n65, n66, n67, n68, n70, n71, n77, n78, n79, n80, n81, n82, n83, n84, n85, n86, n89, n90, n95, n97, n98, n99, n100, n101, n106, n252, n254, n256
VSWR	<2.00, max <3.00
BEAMWIDTH	360°/35° ±5°
POLARIZATION	Vertical
IMPEDANCE	50 Ω

Copyright © 2023, Wireless Instruments. Specifications and information given in this document are subject to change without prior notice.

MECHANICAL SPECIFICATION

MATERIALS	ASA, aluminum, PTFE
CONNECTOR TYPE	Nf
INGRESS PROTECTION	IP68
DIMENSIONS	160 x 160 x 240 mm 6.3 x 6.3 x 9.45 inch
WEIGHT	1.5 kg 3.31 lbs
OPERATING TEMPERATURE	From -40°C to 80°C From -40°F to 176°F
MAST DIAMETER	25-66 mm 0.98-2.60 inch

FREQUENCY BANDS

LTE / 4G

617 MHz

1	2	3	4	5	7	8
9	10	12	13	14	17	18
19	20	22	25	26	27	28
29	30	33	34	35	36	37
38	39	40	41	42	43	44
47	48	49	52	53	65	66
67	68	69	71	85	103	106

6000 MHz

Copyright © 2023, Wireless Instruments. Specifications and information given in this document are subject to change without prior notice.

5G	617 MHz	n1 n2 n3 n5 n7 n8 n12 n13 n14 n18 n20 n25 n26 n28 n29 n30 n34 n38 n39 n40 n41 n47 n48 n53 n65 n66 n67 n71 n77 n78 n80 n81 n82 n83 n84 n85 n86 n89 n90 n95 n97 n98 n100 n101 n256 6000 MHz

COMPATIBLE ROUTERS

VARIANT: A05G4-GN

TELTONIKA	CALYX, RUTC42, RUTC50, RUTC54, RUTM30, RUTM31, RUTM51, RUTM54, RUTM55, RUTM56, RUTM59, RUTX12, RUTX14, RUTX50, TRB500, TRB501
ROBUSTEL	EG5120, EG5200, R2000, R2120 5G, R5010, R5020, R5020 Lite, R5030
CISCO	CG418-E, CG522-E, MG41E, MG51E, MG52E
COMSET	CM550W, CM580W, CM685VX, CM770W-6, CM950W
CUDY	P5
DIGI	EX50, IX25, IX40, TX54 LTE-Advanced, TX64
EE 5G (5GEE)	Smart 5G Hub
ERICSSON (CRADLEPOINT)	E300, E3000, IBR1700, R1900, R2400, R980, W1850, W2005, W4005

Copyright © 2023, Wireless Instruments. Specifications and information given in this document are subject to change without prior notice.

FIBOCOM	FM150-AE, FM150-NA, FM160-EAU, FM160-JK, FM160-NA, FM160-PN, FM190-GL, FM190W-GL, NL952-EAU, NL952-NA
FORTINET	FEX-311F, FEX-311F
FOUR-FAITH	5G Industrial CPE F-NR200, 5G Industrial Router F-NR100, 5G SIM WiFi Router F-NR120, 5G Smart Light Pole Gateway F-G300, 5G WiFi Router with SIM Card Slot F-NR130, Smart Light Pole Gateway F-G310
MILESIGHT	UF31, UR75
PEPLINK	Balance 310 5G, Balance 310 fiber 5G, BR1 Mini 5G, BR1 Pro (CAT-20), BR1 Pro CAT-20, BR2 PRO, MAX BR1 Pro 5G, MAX HD2, MAX HD2 Mini, MAX Transit, MAX Transit Duo Pro, UBR Plus
PERLE	IRG7440
PROROUTE	H685 WRT M2M 5G Router, H900 5G Router
QUECTEL	5G RM500Q-AE, 5G RM500Q-GL, 5G RM502Q-GL, 5G RM505Q-AE, 5G RM510Q-GL, 5G RM520N-EU, 5G RM520N-GL, 5G RM521F-GL, 5G RM530N-GL, LTE-A EM160R-GL
ROBUSTEL	EG5120, EG5200, R2000, R2120 5G, R5010, R5020, R5020 Lite, R5030
SEMTECH (SIERRA WIRELESS)	AirLink MG90 5G, AirLink XR60, EM9190, EM9191, EM9291, EM9293
SIEMENS	6GK5853-2EA00-2DA1, 6GK5856-2EA00-3AA1, 6GK5856-2EA00-3DA1
SIMCOM	A8200E, SIM8202X-M2, SIM8260G-M2, SIM8262X-M2 Series, SIM8380G-M2
TELIT CINTERION	FN980/FN980m, FN990A40/A28, FN990B34/B40, LM960A18 Series, MV31, MV32
TELTONIKA	CALYX, RUTC42, RUTC50, RUTC54, RUTM30, RUTM31, RUTM51, RUTM54, RUTM55, RUTM56, RUTM59, RUTX12, RUTX14, RUTX50, TRB500, TRB501

Copyright © 2023, Wireless Instruments. Specifications and information given in this document are subject to change without prior notice.

WAVETEL	W4600-NR 5G, W4A00 5G, WNR320 5G, WNR340 5G
WLINK	G230, G530, G530
ZTE	ZM9020
ZYXEL	Nebula FWA510, NR5103
OTHER	4 * SMA

PLOTS

VSWR

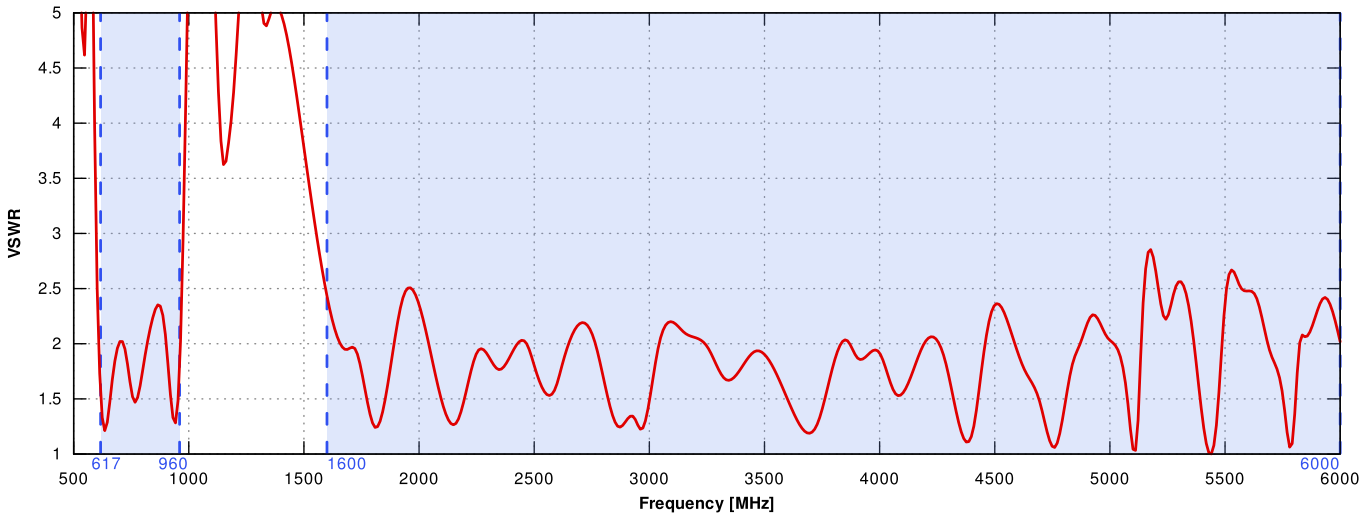

Copyright © 2023, Wireless Instruments. Specifications and information given in this document are subject to change without prior notice.

Gain

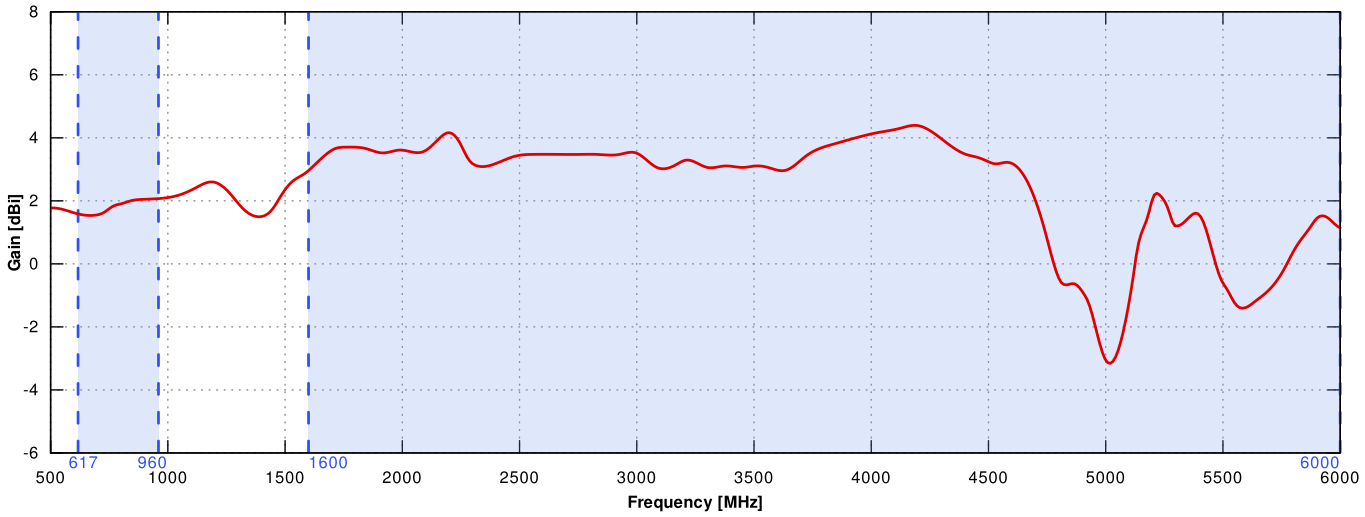

5G/LTE From 650MHz to 950MHz

ELEVATION

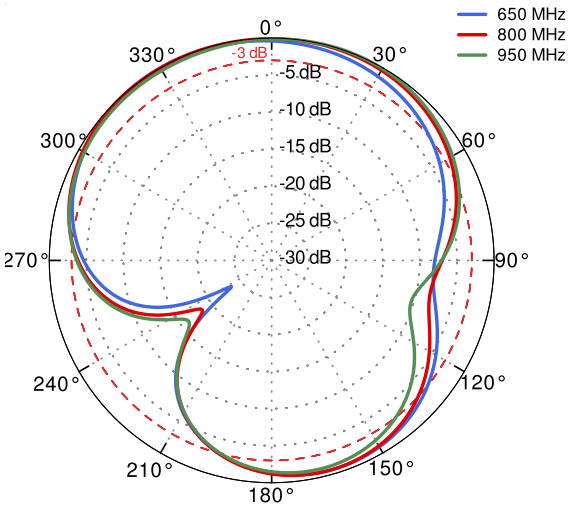

AZIMUTH

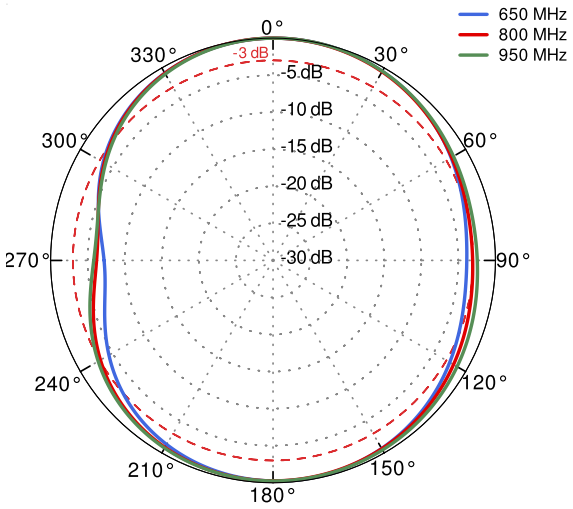

Copyright © 2023, Wireless Instruments. Specifications and information given in this document are subject to change without prior notice.

5G/LTE From 1710MHz to 2500MHz

ELEVATION

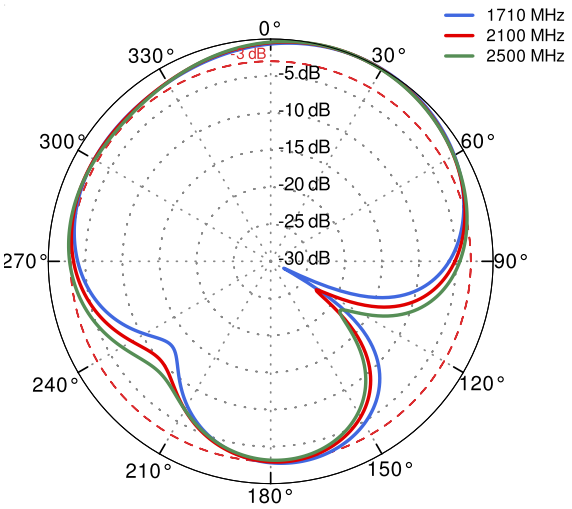

AZIMUTH

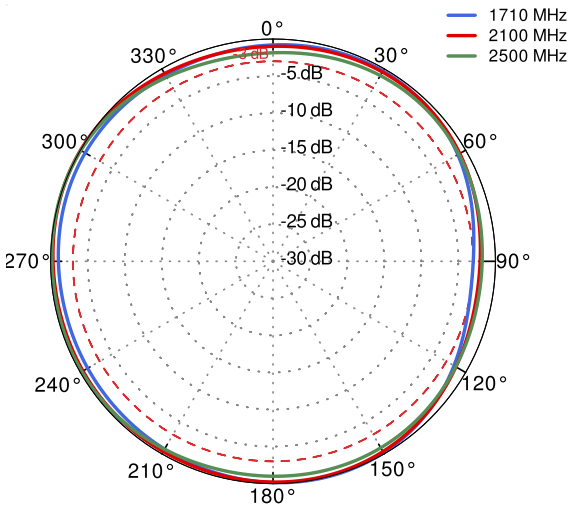

5G/LTE From 3300MHz to 4000MHz

ELEVATION

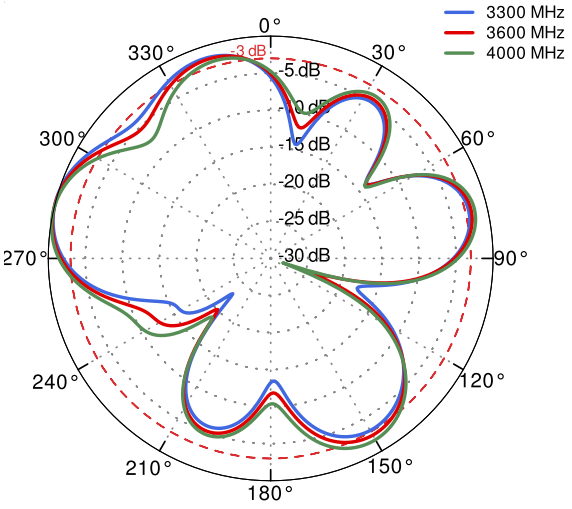

AZIMUTH

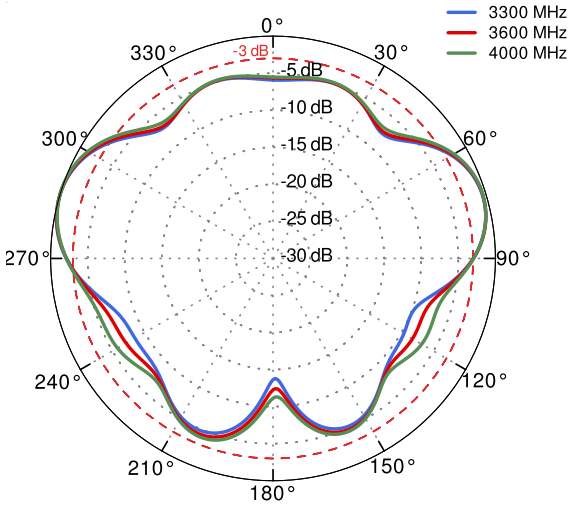

Copyright © 2023, Wireless Instruments. Specifications and information given in this document are subject to change without prior notice.

5G/LTE From 4500MHz to 5500MHz

ELEVATION

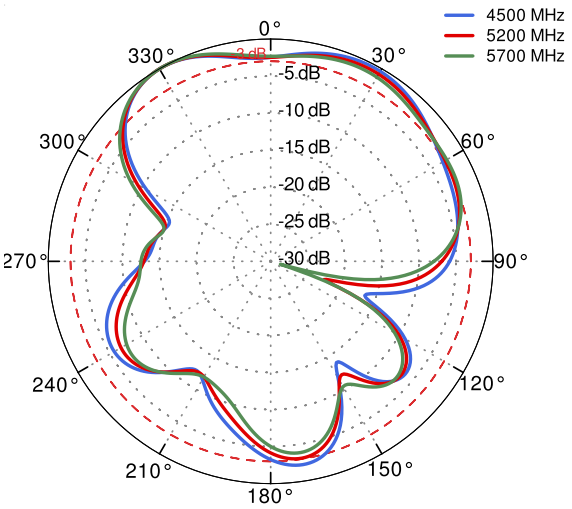

AZIMUTH

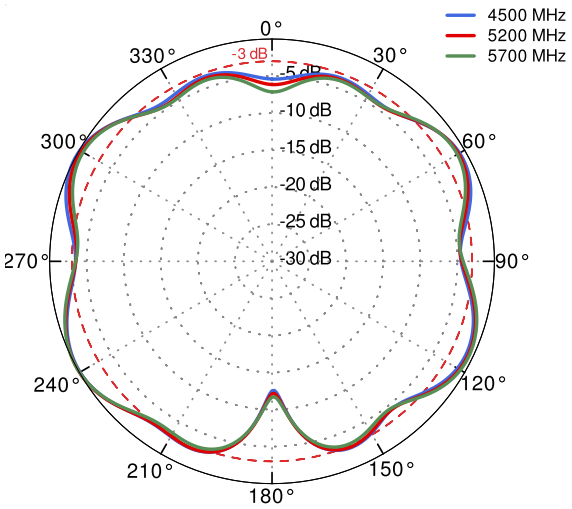

DIMENSIONS

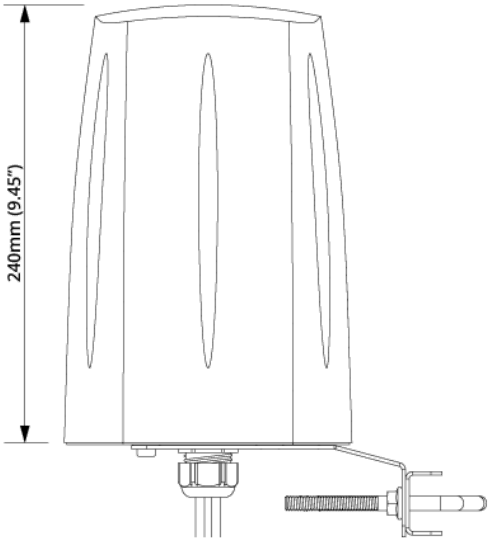

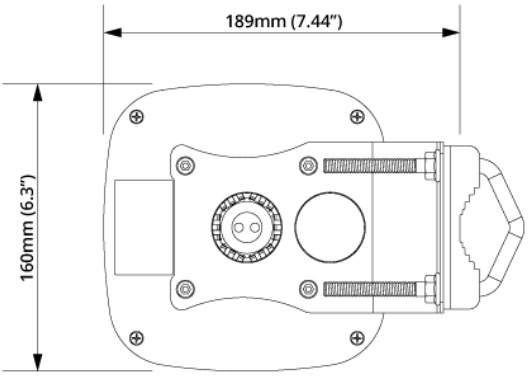

QuWireless WWW.QUWIRELESS.COM

Sales email: sales@quwireless.com **Tel:** +48 513 900 416

Support email: support@quwireless.com **Website:** www.quwireless.com

Address: Wireless Instruments Sp. z o.o., ul. Kościuszki 27, 52-116 Iwiny, Poland

Copyright © 2023, Wireless Instruments. Specifications and information given in this document are subject to change without prior notice.