QuOmni 5G/LTE Global MIMO 2x2 Nf

Omnidirectional ultra wideband 5G/LTE MIMO 2x2 antenna

QuOmni 5G/LTE omnidirectional MIMO 2x2 is ultra wideband LTE Outdoor antenna. It´s primary designed for LTE/5G/3G/2G devices which require high efficiency connections. The antenna covers many LTE bands including the new Extended LTE Band 71, frequencies: **617 - 6000MHz**. The mounting bracket allows the antenna to be installed on the buildings (on the pole or on the wall) as the client antenna or on the moving points like trains, buses, lorries, yachts, boats to receive Internet by LTE/5G/3G/2G. It's ideal solution to use with all industrial and domestic 2x2 LTE modems and routers like: Teltonika, DIGI, Mikrotik, Robustel, Cisco, etc.

5G | BAND 71 | 2x2 MIMO | 617-6000MHz | 4 dBi | OMNI DIRECTIONAL | IP 68 | -40° TO +80°

- WIDE BAND 600-6000MHZ, 5G TECHNOLOGY
- GALVANIZED STEEL, WALL OR POLE MOUNTING BRACKET
- TWO NF CONNECTORS
- 360° BEAMWIDTH
- 4.5DBI GAIN
- MADE IN **EUROPE**

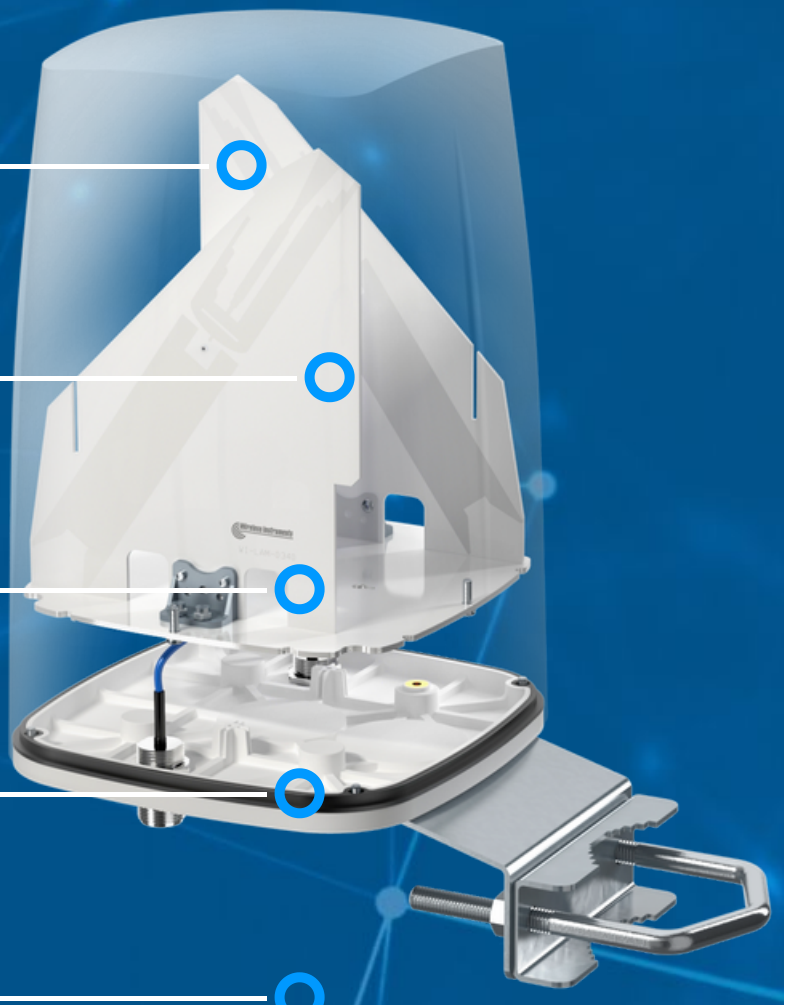

5G / LTE ANTENNA SPECIFICATION

FREQUENCY	0.617 - 0.960 GHz 1.6 - 3.0 GHz 3.0 - 5.0 GHz 5.0 - 6.0 GHz
MAX. GAIN	0.617 - 0.960 GHz : 2 dBi 1.6 - 3.0 GHz : 4 dBi 3.0 - 5.0 GHz : 4 dBi 5.0 - 6.0 GHz : 2 dBi
SUPPORTED LTE BANDS	1, 2, 3, 4, 5, 6, 7, 8, 9, 10, 12, 13, 14, 17, 18, 19, 20, 22, 23, 25, 26, 27, 28, 29, 30, 33, 34, 35, 36, 37, 38, 39, 40, 41, 42, 43, 44, 46, 47, 48, 49, 52, 53, 54, 65, 66, 67, 68, 69, 70, 71, 85, 103, 106, 111, 252, 254, 256
SUPPORTED 5G BANDS	n1, n2, n3, n5, n7, n8, n12, n13, n14, n18, n20, n25, n26, n28, n29, n30, n34, n38, n39, n40, n41, n46, n47, n48, n53, n54, n65, n66, n67, n68, n70, n71, n77, n78, n79, n80, n81, n82, n83, n84, n85, n86, n89, n90, n95, n97, n98, n99, n100, n101, n106, n252, n254, n256
VSWR	<2.00, max <3.00
BEAMWIDTH	360°/35° ±5°
POLARIZATION	Vertical
IMPEDANCE	50 Ω

Copyright © 2023, Wireless Instruments. Specifications and information given in this document are subject to change without prior notice.

MECHANICAL SPECIFICATION

MATERIALS	ASA, aluminum, PTFE
CONNECTOR TYPE	Nf
INGRESS PROTECTION	IP68
DIMENSIONS	160 x 160 x 240 mm 6.3 x 6.3 x 9.45 inch
WEIGHT	1.5 kg 3.31 lbs
OPERATING TEMPERATURE	From -40°C to 80°C From -40°F to 176°F
MAST DIAMETER	25-66 mm 0.98-2.60 inch

FREQUENCY BANDS

LTE / 4G	617 MHz	1	2	3	4	5	7	8	6000 MHz
		9	10	12	13	14	17	18	
		19	20	22	25	26	27	28	
		29	30	33	34	35	36	37	
		38	39	40	41	42	43	44	
		47	48	49	52	53	65	66	
		67	68	69	71	85	103	106	

Copyright © 2023, Wireless Instruments. Specifications and information given in this document are subject to change without prior notice.

5G	617 MHz	n1	n2	n3	n5	n7	n8	n12	6000 MHz
		n13	n14	n18	n20	n25	n26	n28	
		n29	n30	n34	n38	n39	n40	n41	
		n47	n48	n53	n65	n66	n67	n71	
		n77	n78	n80	n81	n82	n83	n84	
		n85	n86	n89	n90	n95	n97	n98	
		n100	n101	n256					

COMPATIBLE ROUTERS

VARIANT: A05G2-GN

TELTONIKA	RUT200, RUT202, RUT204, RUT206, RUT230, RUT240, RUT241, RUT260, RUT261, RUT271, RUT276, RUT281, RUT286, RUT900, RUT901, RUT950, RUT951, RUT951 PoE+, RUT955, RUT956, RUT976, RUT981, RUT986, RUTC40, RUTC41, RUTM09, RUTM11, RUTM16, RUTM56, RUTX09, RUTX11, TRB160
ROBUSTEL	EG3120e, EG5100, LG5100, R1500, R1510, R1511, R1511P, R1520 Global, R1520-4L (S), R1520-4L (V), R2010, R2011, R201x, R2110, R2120, R2120 5G RedCap, R3000, R3000 Industrial, R3000 LG, R3000 Lite, R3000 Quad, R3010
RAJANT	Peregrine LTE BreadCrumb FE1-2455LS, Peregrine LTE BreadCrumb FE1-2455LW
ACKSYS	AirBox LTE, AirWan
ADVANTECH	ICR-2031

Copyright © 2023, Wireless Instruments. Specifications and information given in this document are subject to change without prior notice.

AIRGAIN	NL-SW-LTE-GELS3, NL-SW-LTE-QBG95, NL-SW-LTE-QBG96, NL-SW-LTE-SRC7611-4, NL-SW-LTE-TC1NAG, NL-SW-LTE-TC1WWG, NL-SW-LTE-TC4NAG, NL-SW-LTE-TC4WWG, NL-SW-LTE-TG1WWG, NL-SWNB-LTE-NRF9160-D
AM TELECOM	AMM545, AMM5500, AMM574, AMM585
ANYBUS	Wireless Router WLAN
CISCO	C819 LTE, MG21E, Z4C
COMSET	CM210A-W, CM210Q-W, CM510Q-W, CM685T-W, CM685V-1, CM685V-4, CM685V-6, CM685V-6-G, CM820Q-4, CM820Q-6, CM820T-W, CM820V-4, CM820V-W
D-LINK	DWR-960, G415 AX1500, G416 AX1500, N300 4G
DIGI	6310-DX, 6330-MX, EX12, EX15, IX10, IX15, IX20, IX30, WR31, WR44 RR
ERICSSON (CRADLEPOINT)	CBA550, E100, E102, IBR200, IBR600C, IBR900, L950, R500, R920, S400, S700
FIBOCOM	FG132-M.2, FG132-MiniPCIe, FM101-CG, FM101-EAU, FM101-NA, L610-EU-MiniPCIe, L610-LA-MiniPCIe, L716-CN MiniPCIe, L716-EU-MiniPCIe, NL668-AM MiniPCIe, NL668-EAU-M.2, NL668-EU MiniPCIe, NL668-JP MiniPCIe, NL668-LA MiniPCIe
FORTINET	FEX-101F, FEX-201F, FEX-211E, FEX-212F, FortiGate Rugged 60F-3G4G, FortiGate Rugged 70F-3G4G
FOUR-FAITH	4G Cellular Router F-R100, 4G Industrial Computer F4931-R2H, 4G Industrial Computer F4932-R2H-DF1, Android Industrial Computer F4932-R1Q, Cellular Wireless Router F-R200, Dual Sim 4G Router F3X46, Dual-sim WiFi Router F3946, Edge Computing Gateway F-G100, Industrial WiFi Router F3X36Q, LAN Port Router F3X26 V2, LTE Industrial Router F3X27 V2, LTE Wireless Router F3x36
INHAND	IR302, IR315
MIKROTIK	RB912, RB922, RBM11G, RBM33G

Copyright © 2023, Wireless Instruments. Specifications and information given in this document are subject to change without prior notice.

MILESIGHT	UR32
OPTION	CloudGate LTE WW CAT4
PEPLINK	Balance 20X, Balance 310 5G, MAX BR1 Classic, MAX BR1 ENT, MAX BR1 IP55, MAX BR1 M2M, MAX BR1 Mini, MAX BR1 Mini (HW3), MAX BR1 Mini Core (HW3), MAX BR1 Mini M2M, MAX BR1 MK2, MAX BR1 Pro, MAX BR1 Slim
PERLE	IRG5410, IRG5520, IRG5521, IRG5540, IRG5541
PROROUTE	H685 4G Router, H685 LTE 4G CAT6 Router, H820 M2M 4G Router
QUECLINK	WR220
QUECTEL	LTE-A EM060K-EA, LTE-A EM060K-GL, LTE-A EM061K-GL, LTE-A EM120K-GL, LTE-A EM120R-GL
RAJANT	Peregrine LTE BreadCrumb FE1-2455LS, Peregrine LTE BreadCrumb FE1-2455LW
ROBUSTEL	EG3120e, EG5100, LG5100, R1500, R1510, R1511, R1511P, R1520 Global, R1520-4L (S), R1520-4L (V), R2010, R2011, R201x, R2110, R2120, R2120 5G RedCap, R3000, R3000 Industrial, R3000 LG, R3000 Lite, R3000 Quad, R3010
SEMTECH (SIERRA WIRELESS)	AirLink EX400, AirLink LX40, AirLink LX60, AirLink MP70, AirLink RV50X, AirLink RV55, AirLink RX400, AirLink RX55, EM7411, EM7421, EM7431, EM7511, EM7565, EM7590, EM7595, EM7690, EM8695, MC7411, MC7421, MC7431, WP7607, WP7610
SIEMENS	6GK5876-4AA00-2BA2, 6GK5876-4AA00-2DA2, 6GK5876-4AA10-2BA2
SIMCOM	A7602E-H-M2, A7602E-H-PCIEA, A7608SA-H MiniPCIe, A7906E-M2, A7908, A8230X, SIM7600X-H MiniPCIe, SIM7600X-H-M2, SIM7600X-MiniPCIe, SIM7906A-M2, SIM7906E-M2, SIM7906G-M2, SIM7912A-M2, SIM7912E-M2, SIM8230E, SIM8230G
TELIT CINTERION	FN920C04, LE910Cx Linux mPCIe Series, LE910Cx ThreadX mPCIe Series, LM940, LN920, mPLS63, mPLS83

Copyright © 2023, Wireless Instruments. Specifications and information given in this document are subject to change without prior notice.

TELTONIKA	RUT200, RUT202, RUT204, RUT206, RUT230, RUT240, RUT241, RUT260, RUT261, RUT271, RUT276, RUT281, RUT286, RUT900, RUT901, RUT950, RUT951, RUT951 PoE+, RUT955, RUT956, RUT976, RUT981, RUT986, RUTC40, RUTC41, RUTM09, RUTM11, RUTM16, RUTM56, RUTX09, RUTX11, TRB160
WAVETEL	W2400 LTE , W3600 4G/LTE Dual WAN, W3604 Multi-WAN, W3608 Multi-WAN, W421, W4300S 5G, W4600, W4600-S2
WLINK	ER120, G200, G510, G520, ODU310, R210, R220, R520
ZYXEL	LTE3202-M437, LTE3301-PLUS, LTE5388-M804, LTE5398-M904, NR5101
OTHER	2 * SMA, 3 * SMA

PLOTS

VSWR

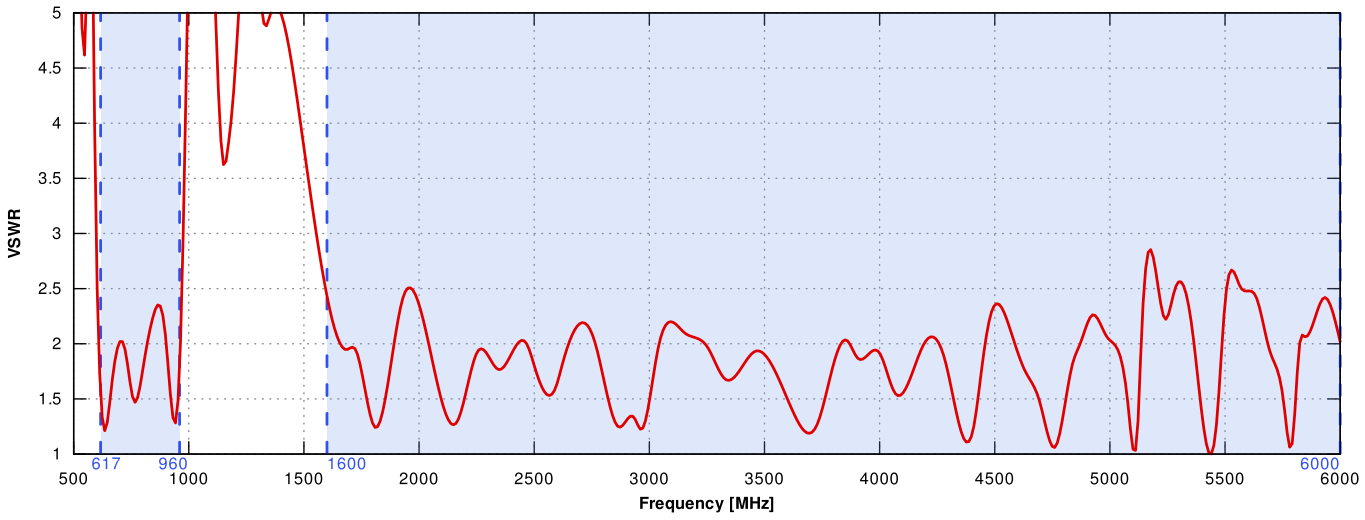

Copyright © 2023, Wireless Instruments. Specifications and information given in this document are subject to change without prior notice.

Gain

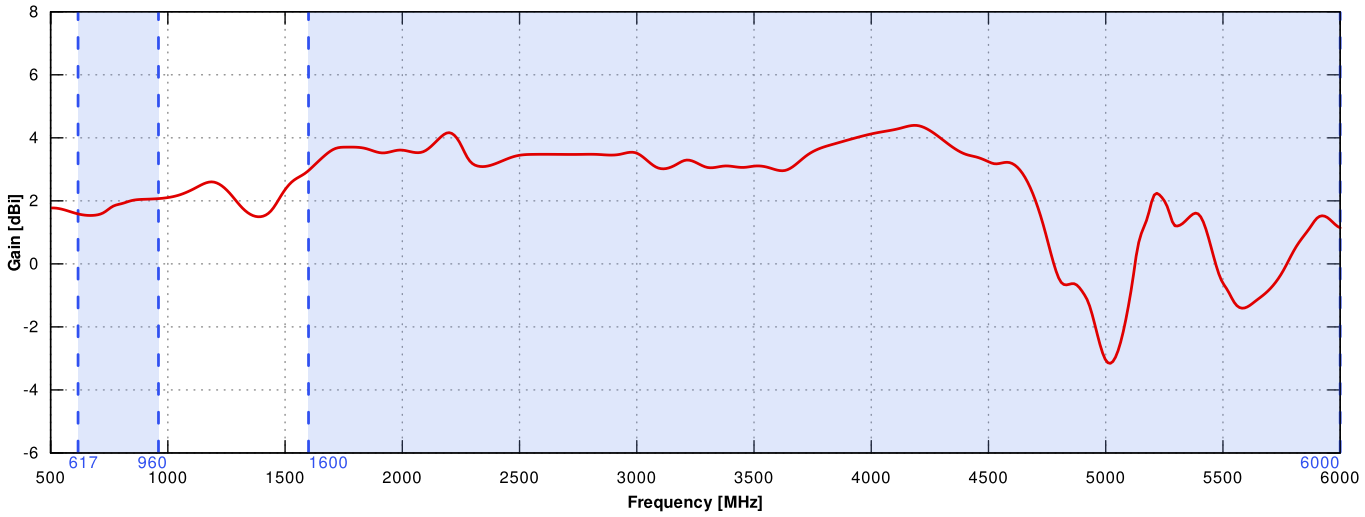

5G/LTE From 650MHz to 950MHz

ELEVATION

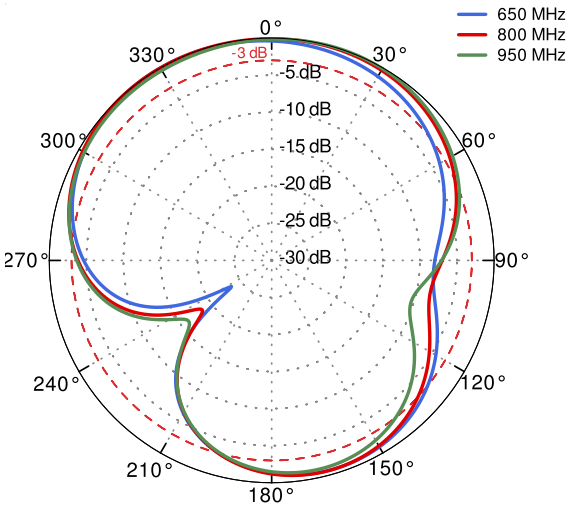

AZIMUTH

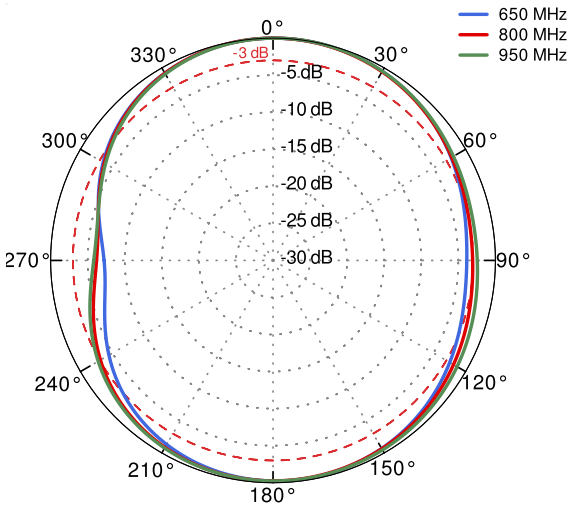

Copyright © 2023, Wireless Instruments. Specifications and information given in this document are subject to change without prior notice.

5G/LTE From 1710MHz to 2500MHz

ELEVATION

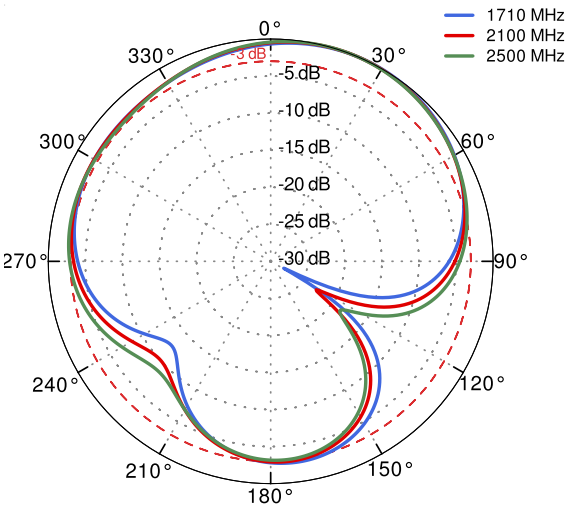

AZIMUTH

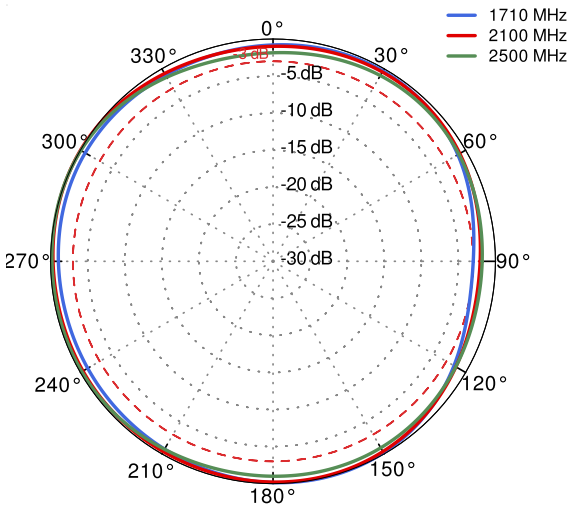

5G/LTE From 3300MHz to 4000MHz

ELEVATION

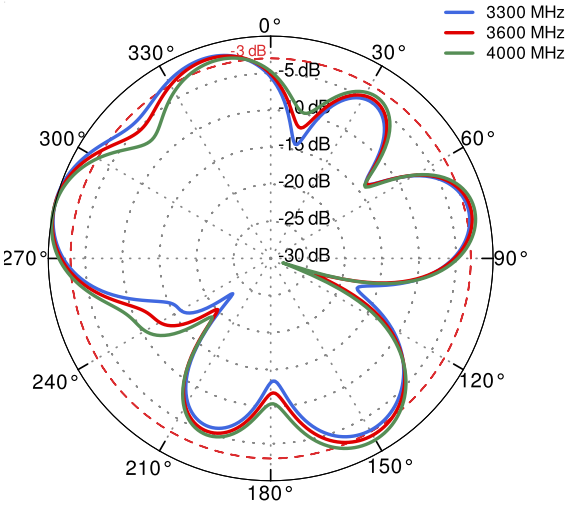

AZIMUTH

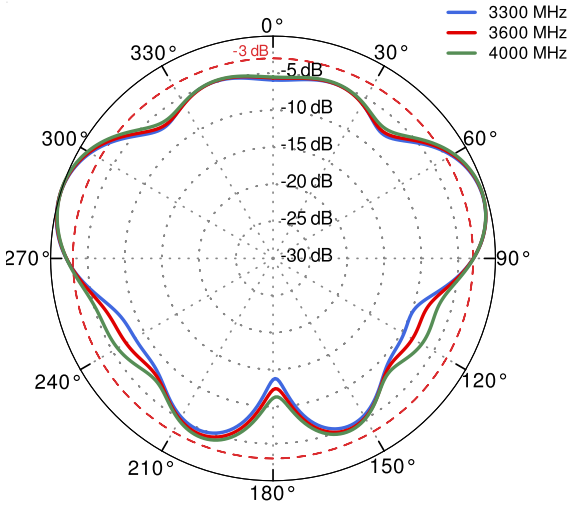

Copyright © 2023, Wireless Instruments. Specifications and information given in this document are subject to change without prior notice.

5G/LTE From 4500MHz to 5500MHz

ELEVATION

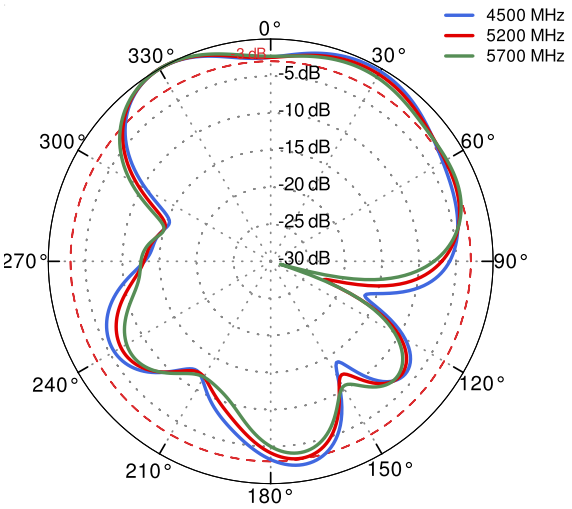

AZIMUTH

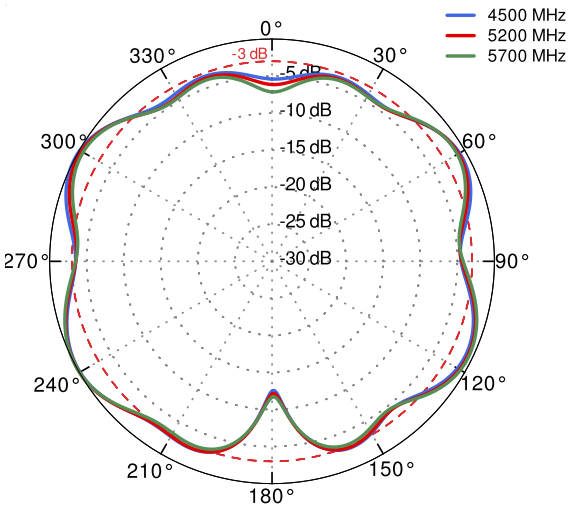

DIMENSIONS

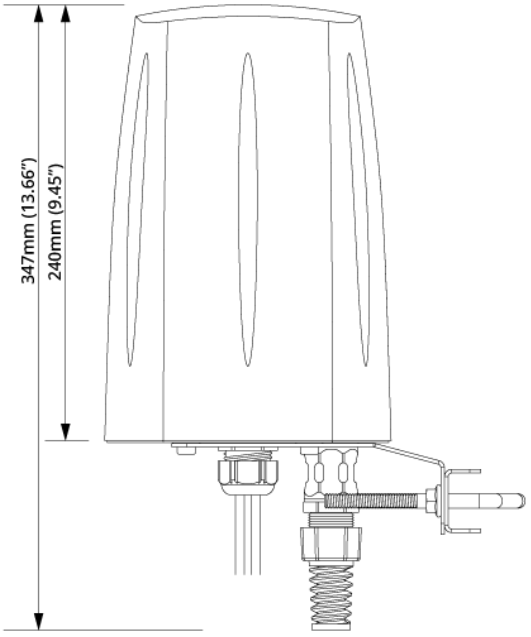

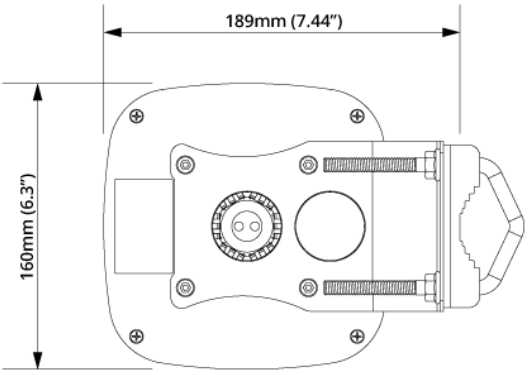

QuWireless WWW.QUWIRELESS.COM

Sales email: sales@quwireless.com **Tel:** +48 513 900 416

Support email: support@quwireless.com **Website:** www.quwireless.com

Address: Wireless Instruments Sp. z o.o., ul. Kościuszki 27, 52-116 Iwiny, Poland

Copyright © 2023, Wireless Instruments. Specifications and information given in this document are subject to change without prior notice.