QuOmni 7V-8 Wi-Fi 6E

QuOmni 7V-8 Wi-Fi 6E offers a 360 degrees, 6dBi (2.4GHz) & 7.5dBi (5GHz and 7GHz) MIMO 8x8 gain signal. It is a perfect indoor and outdoor device for industrial installations.

QuOmni 7V-8 Wi-Fi 6E offers a **360 degrees**, **6dBi (2.4GHz)** & **7.5dBi (5GHz and 7GHz) MIMO 8x8** gain signal. It is a futureproof solution with **Wi-Fi 6E** and **Wi-Fi 7** support. It is a perfect indoor and outdoor device for industrial installations. This antenna is predicted to be installed as the hotspot in parks, stadiums, warehouses, production halls, malls, lecture halls or another public places.
The antenna comes in three versions: with 8*70cm (28inch) cables terminated with Nm, RPSMA, RPTNC connectors.



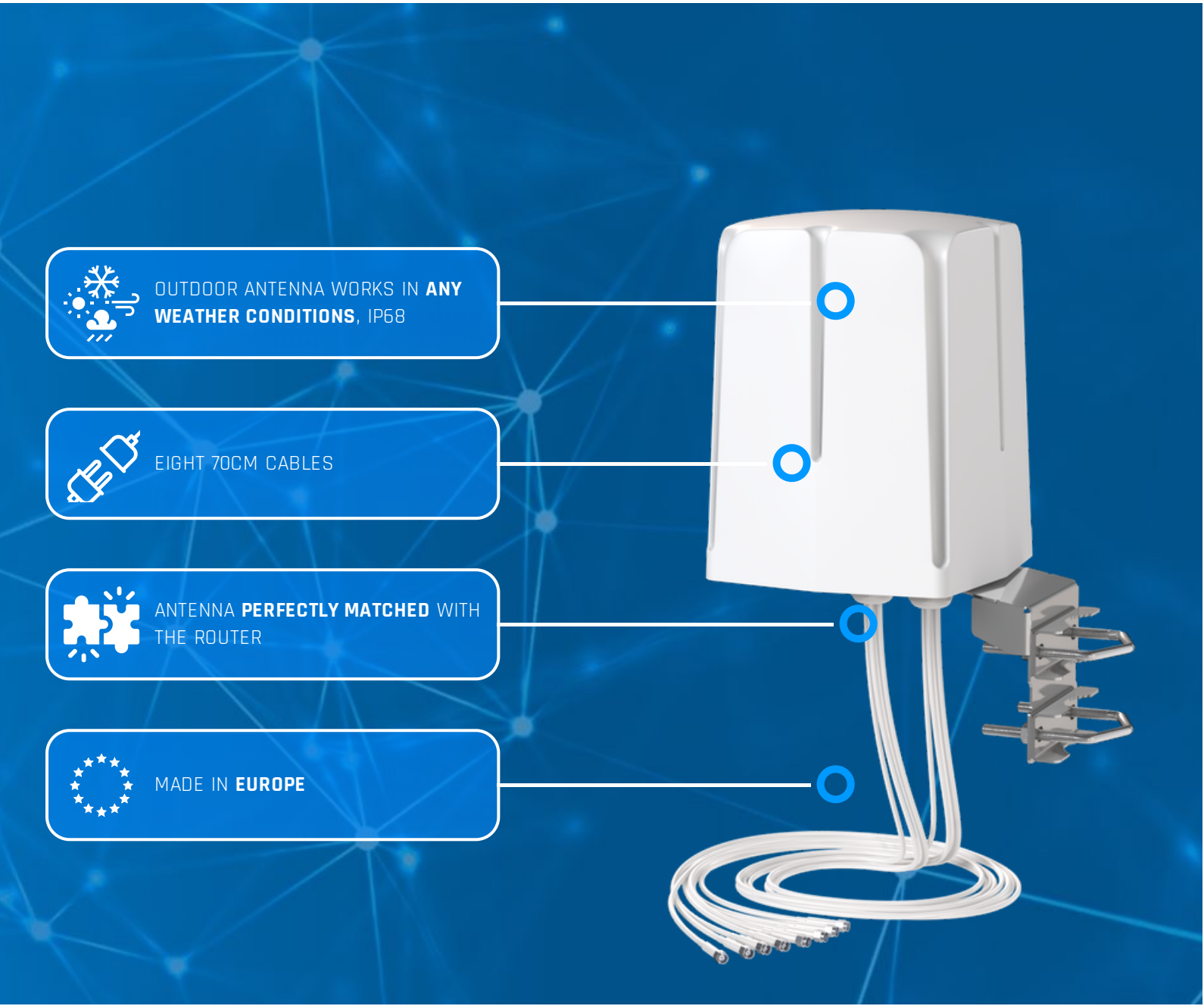

WI-FI SPECIFICATION

FREQUENCY	2.4 - 2.5 GHz 5.0 - 7.2 GHz
GAIN	2.4 - 2.5 GHz: 6dBi 5 GHz: 7.5dBi 7 GHz: 7.5dBi
VSWR	< 1.50, max < 2.00
BEAMWIDTH	360°/25°
POLARIZATION	Vertical
IMPEDANCE	50 Ω
MAX INPUT POWER	50W
DC GROUND	Yes

MECHANICAL SPECIFICATION

MATERIAL	ASA
CONNECTOR	8xRPSMA/8xRPTNC/8xNM
OUTER DIMENSIONS	210 x 210 x 260 mm 8.27 x 8.27 x 10.24 inch
OPERATING TEMPERATURE	-40°C to 80°C -40°F to 176°F

Copyright © 2023, Wireless Instruments. Specifications and information given in this document are subject to change without prior notice.

MOUNTING KIT

MATERIAL	Galvanized steel
WEIGHT	0.4kg
MOUNTING PLACE	Wall or mast
MAST DIAMETER	25-66 mm 0.98-2.60 inch

COMPATIBLE ROUTERS

VARIANT: 07V.8RS

ADTRAN	Bluesocket 3045
AEROHIVE NETWORKS	AP510CX, AP650X
ALCATEL-LUCENT	Stellar AP1232
ARUBA	AP-654, AP-754
ENGENIUS	ECW270, EWS371AP
EXTREME NETWORKS	AP460e, AP510CX, AP510e
FORTINET	FAP-S423E, FAP-U423EV
HUAWEI	AP6760-X1E
XIRRUS	XR-2000H, XR-2425H

Copyright © 2023, Wireless Instruments. Specifications and information given in this document are subject to change without prior notice.

VARIANT: 07V.8NM

CISCO	Catalyst IW9167E
ENGENIUS	EWS871AP
EXTREME NETWORKS	AP 8163
FORTINET	FAP-432G, FAP-S422E, FAP-U422EV
HUAWEI	AP8182DN, AP8760R-X1E
SIEMENS	6GK5788-2GY01-0AA0, 6GK5788-2GY01-0TA0
XIRRUS	XH2-240

VARIANT: 07V.8RT

PLOTS

VSWR

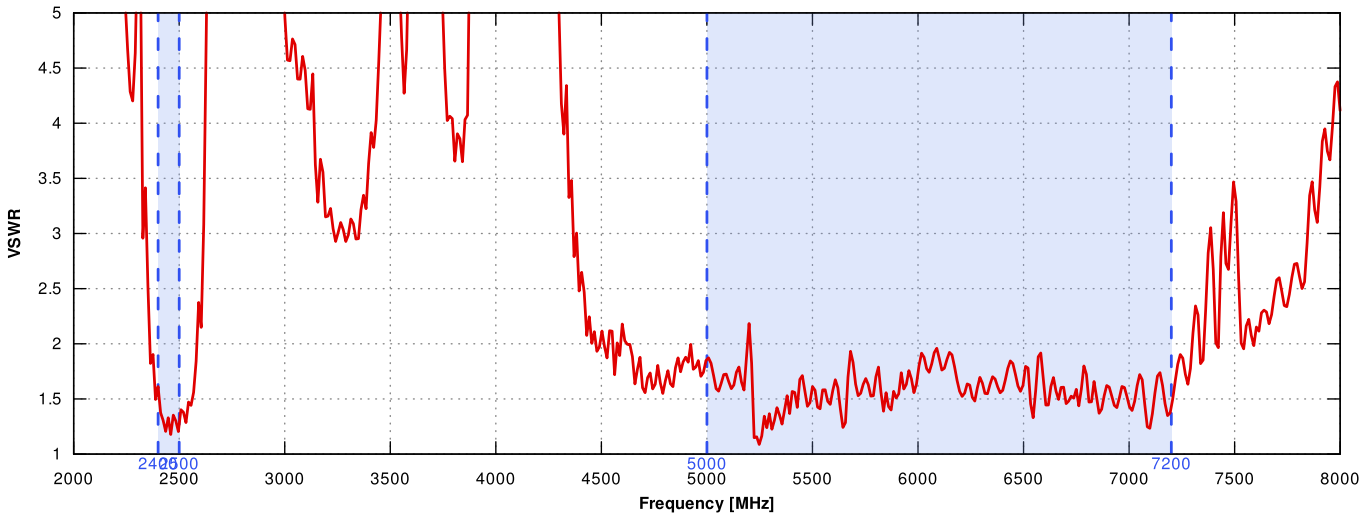

Copyright © 2023, Wireless Instruments. Specifications and information given in this document are subject to change without prior notice.

GAIN

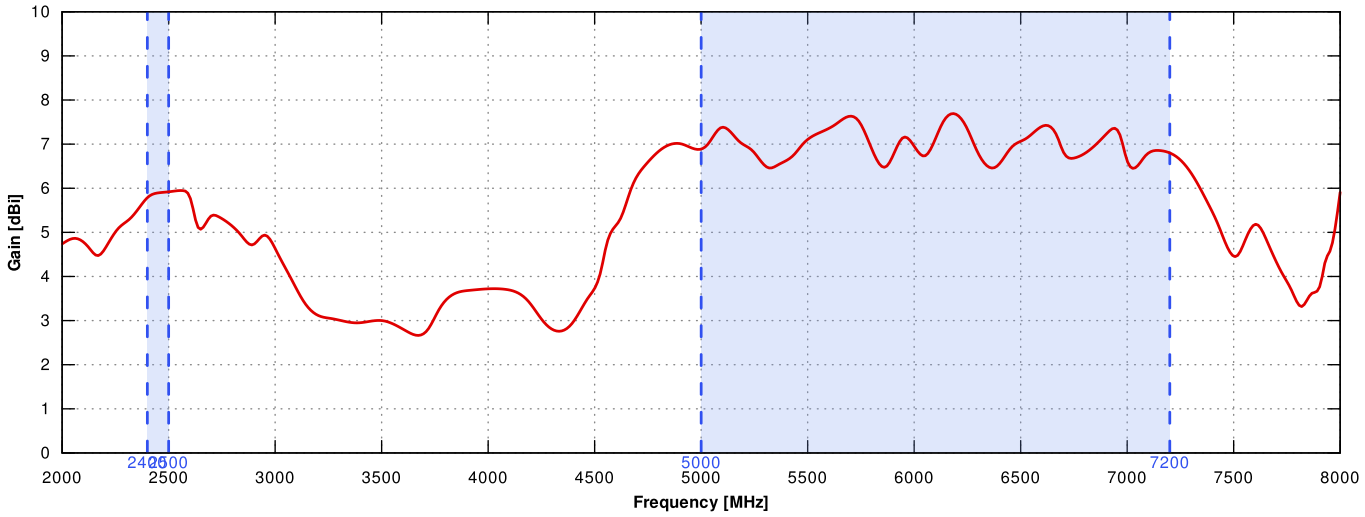

2.4GHz and 6.5GHz

AZIMUTH

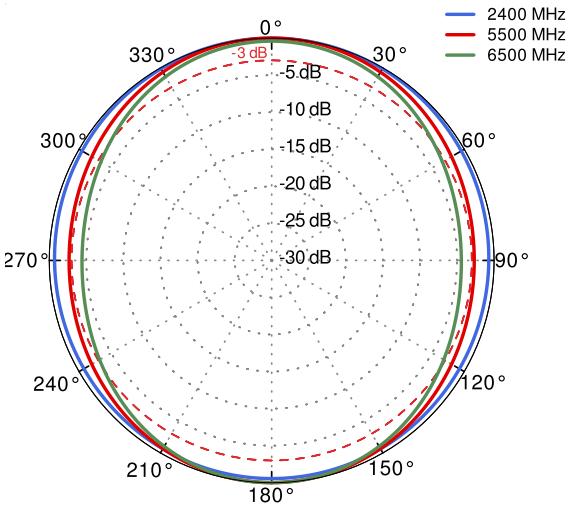

ELEVATION

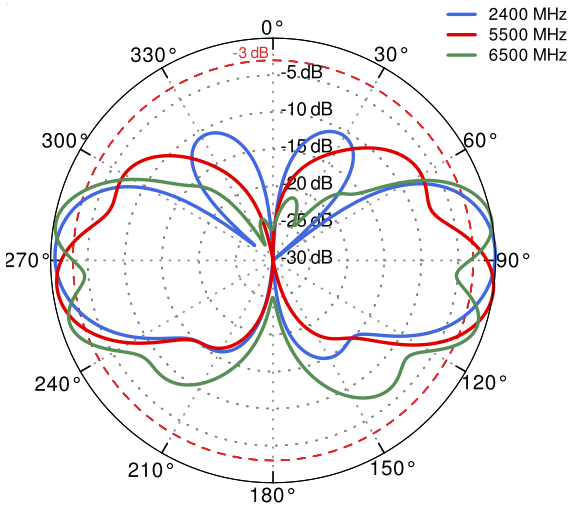

Copyright © 2023, Wireless Instruments. Specifications and information given in this document are subject to change without prior notice.

DIMENSIONS

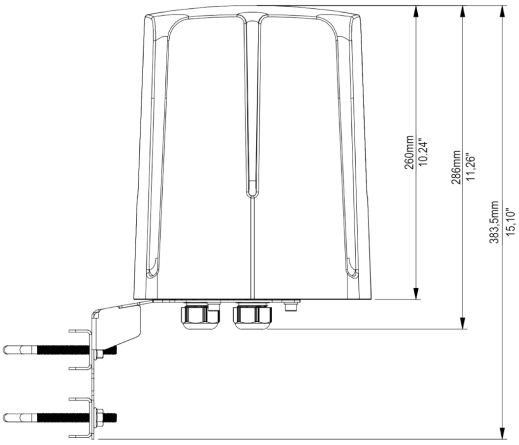

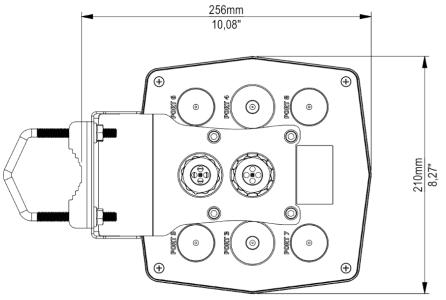

WWW.QUWIRELESS.COM

Sales email: sales@quwireless.com **Tel:** +48 513 900 416

Support email: support@quwireless.com **Website:** www.quwireless.com

Address: Wireless Instruments Sp. z o.o., ul. Kościuszki 27, 52-116 Iwiny, Poland

Copyright © 2023, Wireless Instruments. Specifications and information given in this document are subject to change without prior notice.