QuOmni LTE SISO

Omnidirectional multiband LTE SISO antenna

QuOmni LTE omnidirectional SISO LTE antenna working in Vertical polarization. It´s desired for LTE/3G/2G connections. The antenna can be used for the most popular LTE bands (e.g. 3,7,20) and frequencies 694-2700 MHz. This antenna is predicted to be installed on the buildings (on the pole or on the wall) as a client antenna or on a moving points like trains, buses, lorries, yachts or boats to receive Internet by LTE/3G. Using SMA connectors makes it compatible with most LTE devices, like Teltonika: RUT230, TRB140, TRB141, TRB142, TRB145, TRM240, TRM250 and other SISO LTE/3G/2G modems and routers.

4G LTE | SISO | 694-2700MHz | 4 dBi | OMNI DIRECTIONAL | IP 68 | -40° TO +80°



LTE ANTENNA SPECIFICATION

FREQUENCY	694 - 960 MHz 1.7 - 2.2 GHz 2.2 - 2.7 GHz
GAIN	694 - 960 MHz : 2 dBi 1.7 - 2.2 GHz : 2 dBi 2.2 - 2.7 GHz : 4 dBi
SUPPORTED LTE/5G BANDS	1, 2, 3, 4, 5, 6, 7, 8, 9, 10, 11, 12, 13, 14, 17, 18, 19, 20, 21, 23, 24, 25, 26, 27, 28, 29, 30, 32, 33, 34, 35, 36, 37, 38, 39, 40, 41, 44, 45, 50, 51, 53, 54, 65, 66, 67, 68, 69, 70, 71, 74, 75, 76, 85, 103, 106, 111, 252, 253, 254, 255, 256, n1, n2, n3, n5, n7, n8, n12, n13, n14, n18, n20, n24, n25, n26, n28, n29, n30, n34, n38, n39, n40, n41, n50, n51, n53, n54, n65, n66, n67, n68, n70, n71, n74, n75, n76, n80, n81, n82, n83, n84, n85, n86, n89, n90, n91, n92, n93, n94, n95, n97, n98, n99, n100, n101, n106, n109, n110, n250, n251, n252, n253, n254, n255, n256
VSWR	<1.60, max <2.00
BEAMWIDTH	360°/35° ±5°
POLARIZATION	Vertical
IMPEDANCE	50 Ω

Copyright © 2023, Wireless Instruments. Specifications and information given in this document are subject to change without prior notice.

MECHANICAL SPECIFICATION

MATERIALS	ASA, aluminum, PTFE
CONNECTOR TYPE	1x SMA plug
INGRESS PROTECTION	IP68
DIMENSIONS	160 x 160 x 240 mm 6.3 x 6.3 x 9.45 inch
WEIGHT	1.5 kg 3.31 lbs
OPERATING TEMPERATURE	From -40°C to 80°C From -40°F to 176°F
CABLE LENGTH	5m (P/N: AOLS1) or 10m (P/N: AOLS1-1)
CABLE TYPE	LMR195 white
MAST DIAMETER	25-66 mm 0.98-2.60 inch

Copyright © 2023, Wireless Instruments. Specifications and information given in this document are subject to change without prior notice.

FREQUENCY BANDS

LTE / 4G GSM	617 MHz	5	6	8	12	13	14	17	960 MHz
		18	19	20	26	27	28	29	
		44	67	68	71	85	103	106	
		n5	n8	n12	n13	n14	n18	n20	
		n26	n28	n29	n67	n68	n71	n81	
		n82	n83	n85	n89	n100	n106		
LTE / 4G UMTS	1710 MHz	1	2	3	4	9	10	25	2170 MHz
		33	34	35	36	37	39	111	
		n1	n2	n3	n25	n34	n39	n80	
		n84	n86	n95	n98	n101			
LTE / 4G WCS DARS	2300 Mhz	30	40	n30	n40	n97			2400 MHz
LTE / 4G	2400 MHz	7	38	41	53	69	n7	n38	2700 MHz
		n41	n53	n90					

Copyright © 2023, Wireless Instruments. Specifications and information given in this document are subject to change without prior notice.

COMPATIBLE ROUTERS

VARIANTS: AOLS1, AOLS1-1

TELTONIKA	TRB140, TRB141, TRB142, TRB143, TRB145, TRB236, TRB245, TRB246, TRB255
ROBUSTEL	EG5101, M1000 MP, M1200
ETIC TELECOM	RAS-C-100-LW
FORTINET	Industrial GPS Modem F7916
FOUR-FAITH	4G LTE WiFi Modem F2X16 V4, LoRa Router F8936-L, Sim Card WiFi Router F3X26Q, Wireless 4G LTE Router F3X26-TB, Wireless M-Bus Gateway F-R100WM
MILESIGHT	UR32L, UR32S, UR41
ROBUSTEL	EG5101, M1000 MP, M1200
SIEMENS	6GK7243-7KX30-0XE0, 6GK7243-7SX30-0XE0
TELTONIKA	TRB140, TRB141, TRB142, TRB143, TRB145, TRB236, TRB245, TRB246, TRB255
WAVETEL	WM21 4G Cat M/NB Modem
WLINK	M100, M303, R100, R200

Copyright © 2023, Wireless Instruments. Specifications and information given in this document are subject to change without prior notice.

PLOTS

VSWR

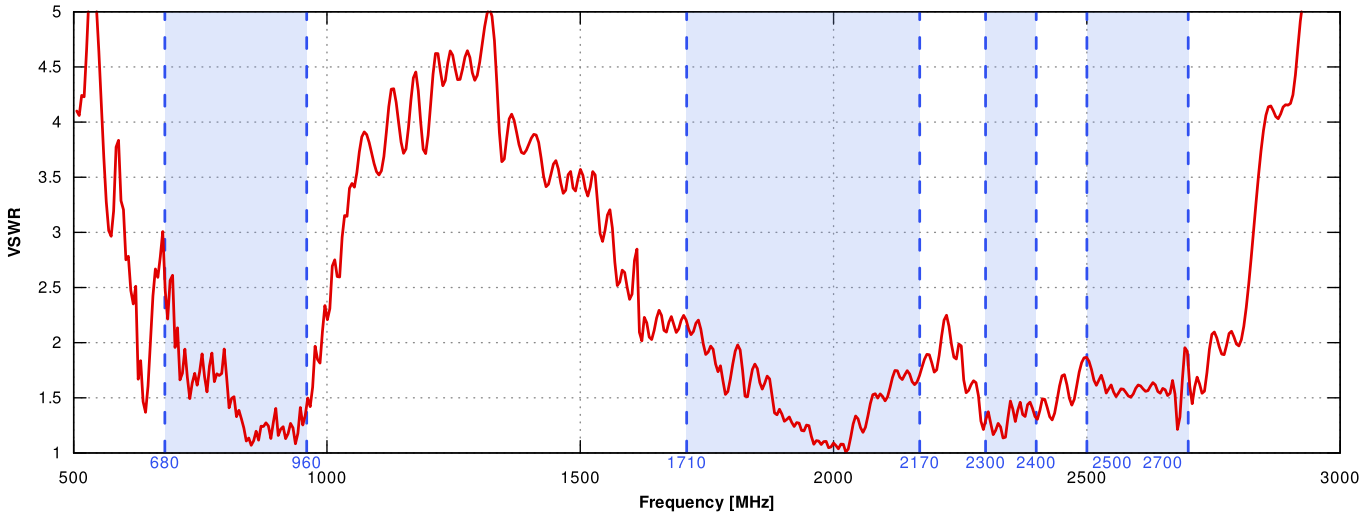

Gain

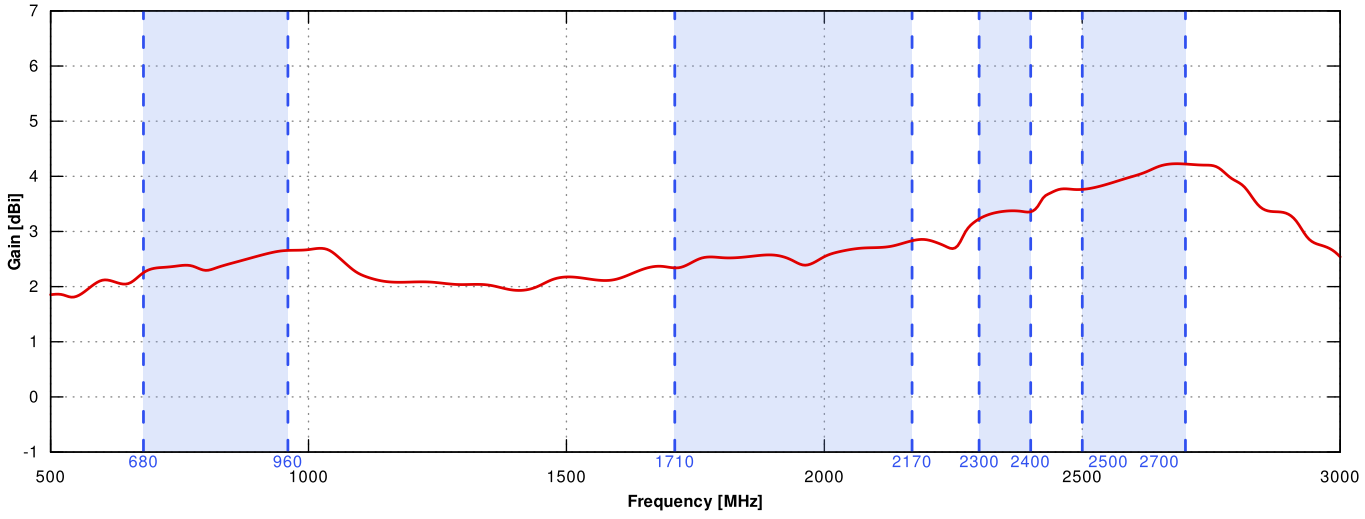

Copyright © 2023, Wireless Instruments. Specifications and information given in this document are subject to change without prior notice.

From 700MHz to 900MHz

ELEVATION

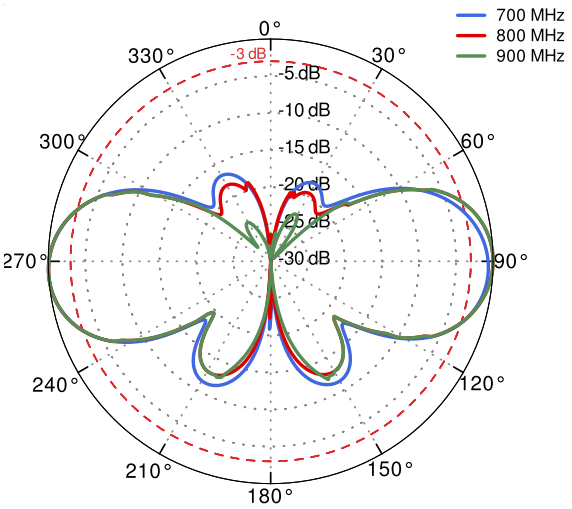

AZIMUTH

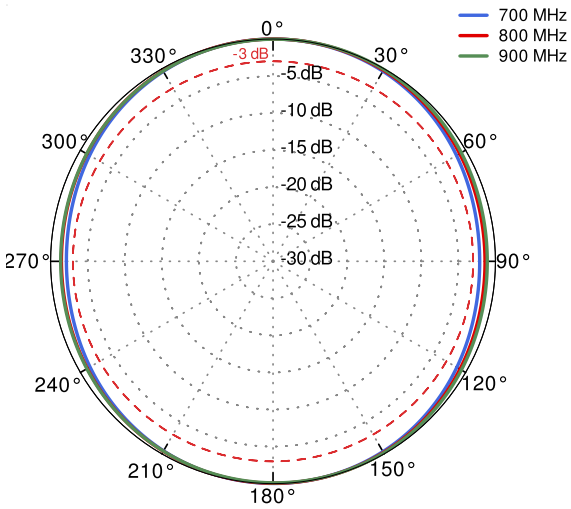

From 1.71GHz to 2.17GHz

ELEVATION

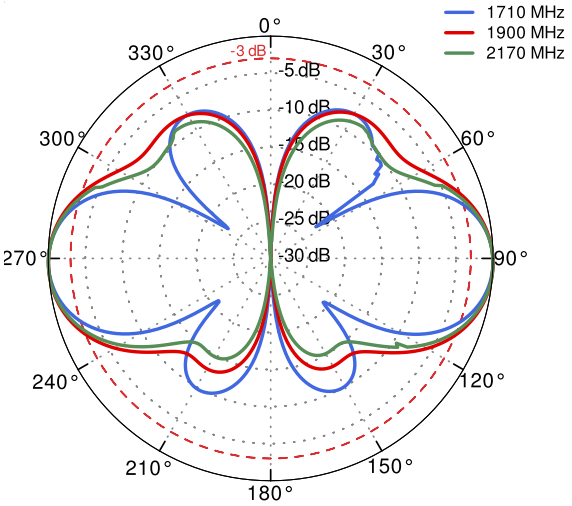

AZIMUTH

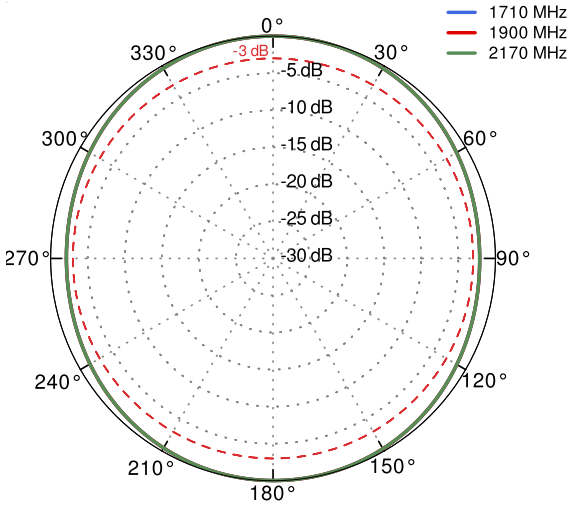

Copyright © 2023, Wireless Instruments. Specifications and information given in this document are subject to change without prior notice.

From 2.3GHz to 2.7GHz

ELEVATION

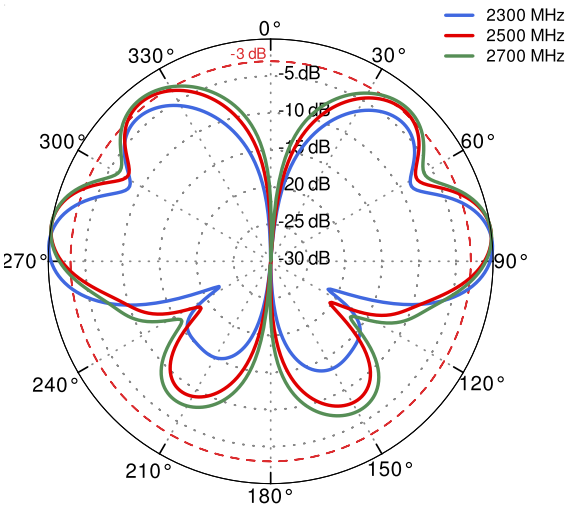

AZIMUTH

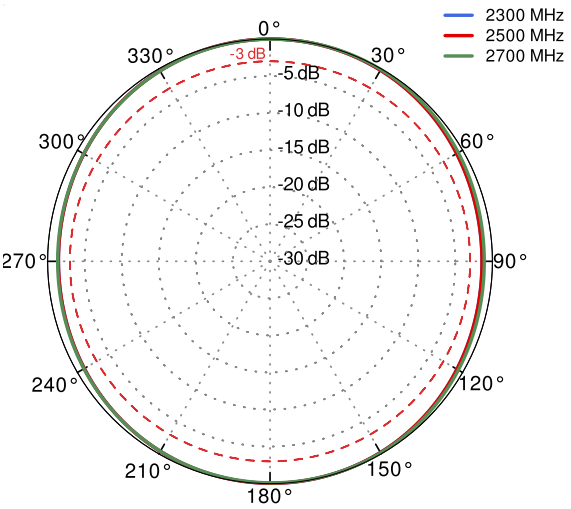

DIMENSIONS

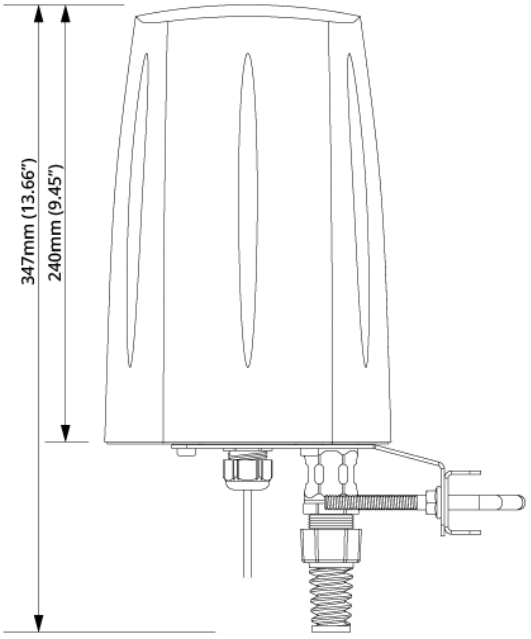

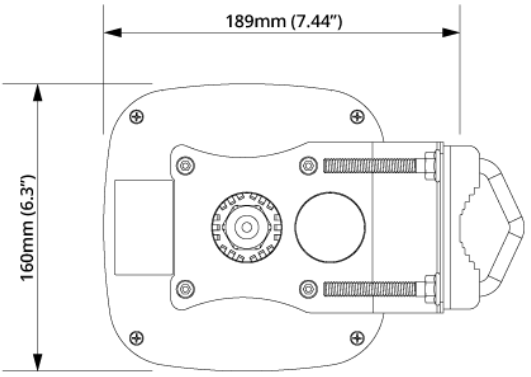

QuWireless
WWW.QUWIRELESS.COM
Sales email: sales@quwireless.com **Tel:** +48 513 900 416
Support email: support@quwireless.com **Website:** www.quwireless.com
Address: Wireless Instruments Sp. z o.o., ul. Kościuszki 27, 52-116 Iwiny, Poland

Copyright © 2023, Wireless Instruments. Specifications and information given in this document are subject to change without prior notice.