QuWireless

DATASHEET / -
VERSION / 2.60

QuOmni 5G/LTE Global MIMO 4x4 with 1.5m cables

Omnidirectional ultra wideband 5G/LTE MIMO 4x4 antenna with 1.5m cables

QuOmni 5G/LTE omnidirectional MIMO 4x4 is ultra wideband LTE Outdoor antenna. It´s primary designed for LTE/5G/3G/2G devices which require high efficiency connections. The antenna covers many LTE bands including the new Extended LTE Band 71, frequencies: **617 - 6000MHz**. The mounting bracket allows the antenna to be installed on the buildings (on the pole or on the wall) as the client antenna or on the moving points like trains, buses, lorries, yachts, boats to receive Internet by LTE/5G/3G/2G. It's ideal solution to use with all industrial and domestic 4x4 LTE modems and routers like: Teltonika, DIGI, Mikrotik, Robustel, Cisco, etc.

5G | BAND 71 | 4x4 MIMO | 617-6000MHz | 4 dBi | OMNI DIRECTIONAL | IP 68 | -40° TO +80°



5G / LTE ANTENNA SPECIFICATION

FREQUENCY	617 - 960 MHz 1.7 - 2.7 GHz 3.3 - 4.7 GHz 5.2 - 6.0 GHz
GAIN	617 - 960 MHz : 3 dBi 1.7 - 2.2 GHz : 4 dBi 3.3 - 4.7 GHz : 4.5 dBi 5.2 - 6.0 GHz : 2.5dBi
SUPPORTED LTE BANDS	1, 2, 3, 4, 5, 7, 8, 9, 10, 12, 13, 14, 17, 18, 19, 20, 22, 25, 26, 27, 28, 29, 30, 33, 34, 35, 36, 37, 38, 39, 40, 41, 42, 43, 44, 47, 48, 49, 52, 53, 65, 66, 67, 68, 69, 71, 85, 103, 106
SUPPORTED 5G BANDS	n1, n2, n3, n5, n7, n8, n12, n13, n14, n18, n20, n25, n26, n28, n29, n30, n34, n38, n39, n40, n41, n47, n48, n53, n65, n66, n67, n71, n77, n78, n80, n81, n82, n83, n84, n85, n86, n89, n90, n95, n97, n98, n100, n101, n256
VSWR	<1.80, max <2.00
BEAMWIDTH	360°/35° ±5°
POLARIZATION	Vertical
IMPEDANCE	50 Ω
CONNECTOR	4x SMA
CABLE LENGTH	1.5 m

Copyright © 2023, Wireless Instruments. Specifications and information given in this document are subject to change without prior notice.

MECHANICAL SPECIFICATION

MATERIALS	ASA, aluminum, PTFE
INGRESS PROTECTION	IP68
DIMENSIONS	160 x 160 x 240 mm 6.3 x 6.3 x 9.45 inch
WEIGHT	1.5 kg 3.31 lbs
OPERATING TEMPERATURE	From -40°C to 80°C From -40°F to 176°F
MAST DIAMETER	25-66 mm 0.98-2.60 inch

FREQUENCY BANDS

LTE / 4G	617 MHz	1	2	3	4	5	7	8
		9	10	12	13	14	17	18
		19	20	22	25	26	27	28
		29	30	33	34	35	36	37
		38	39	40	41	42	43	44
		47	48	49	52	53	65	66
		67	68	69	71	85	103	106
								6000 MHz

Copyright © 2023, Wireless Instruments. Specifications and information given in this document are subject to change without prior notice.

5G

617 MHz — 6000 MHz

n1	n2	n3	n5	n7	n8	n12
n13	n14	n18	n20	n25	n26	n28
n29	n30	n34	n38	n39	n40	n41
n47	n48	n53	n65	n66	n67	n71
n77	n78	n80	n81	n82	n83	n84
n85	n86	n89	n90	n95	n97	n98
n100	n101	n256				

COMPATIBLE ROUTERS

VARIANT: -

PLOTS

VSWR

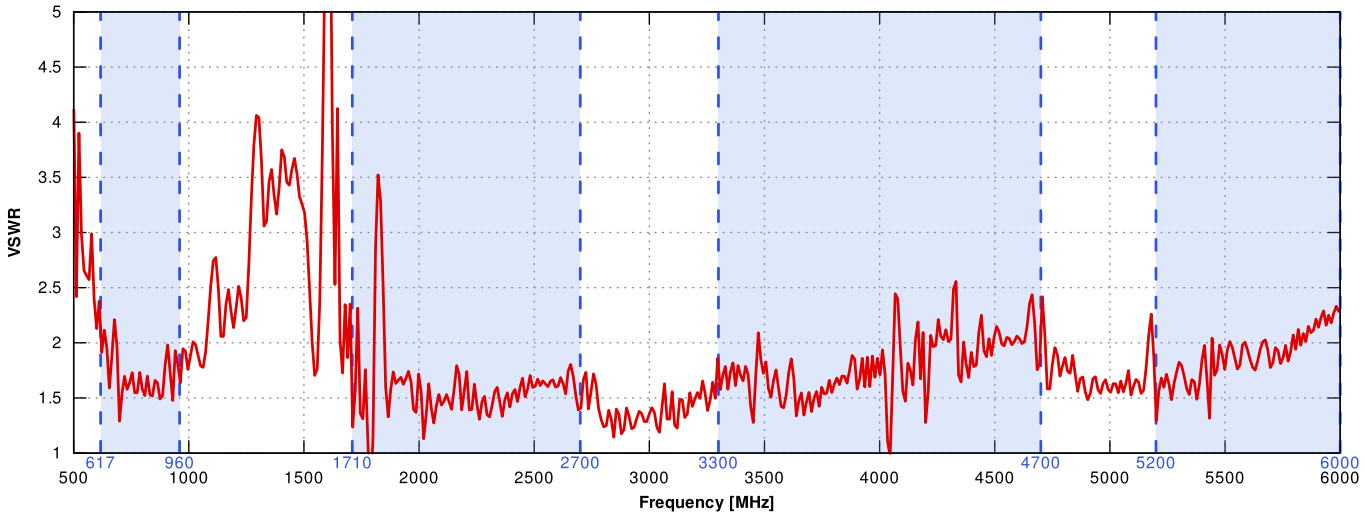

Copyright © 2023, Wireless Instruments. Specifications and information given in this document are subject to change without prior notice.

Gain

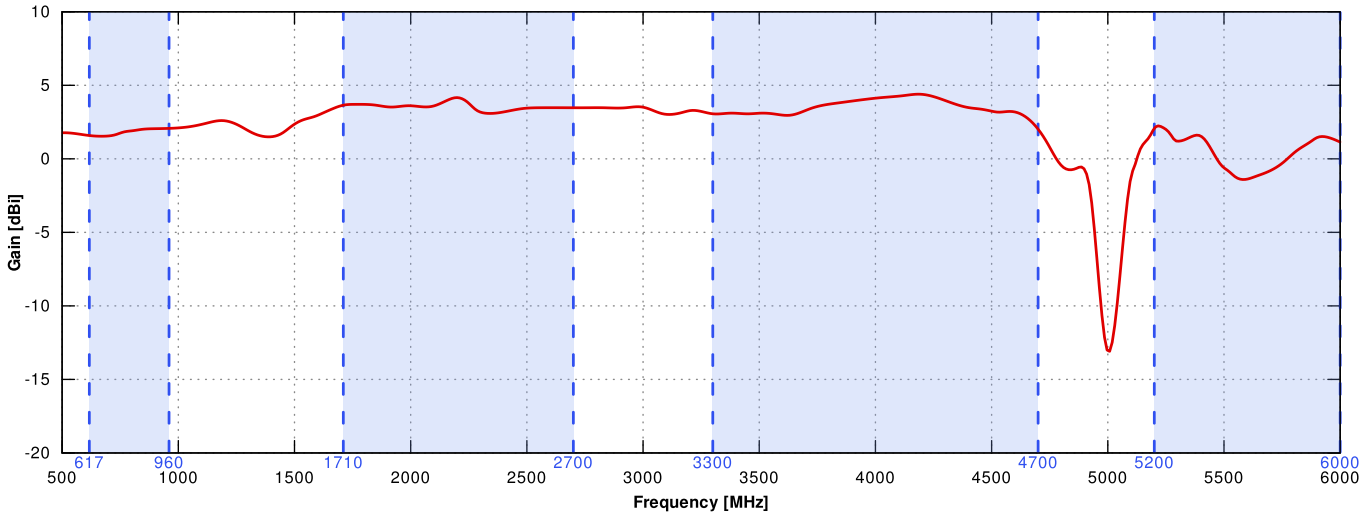

From 650MHz to 950MHz

ELEVATION

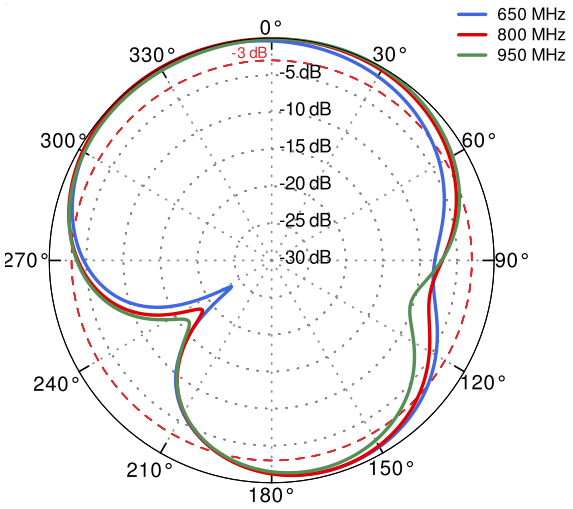

AZIMUTH

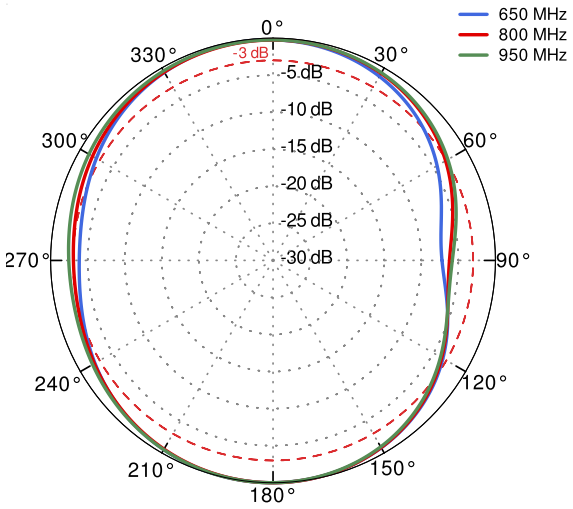

Copyright © 2023, Wireless Instruments. Specifications and information given in this document are subject to change without prior notice.

From 1.71GHz to 2.5GHz

ELEVATION

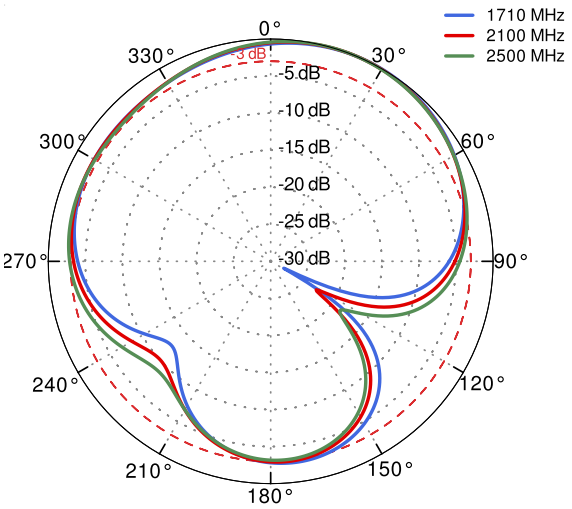

AZIMUTH

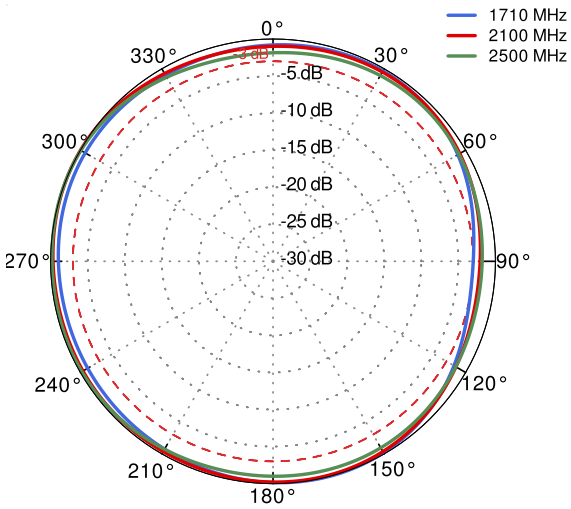

From 3.3GHz to 4.0GHz

ELEVATION

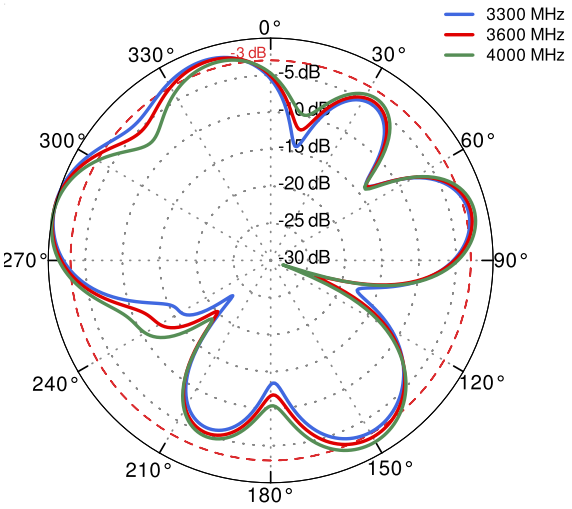

AZIMUTH

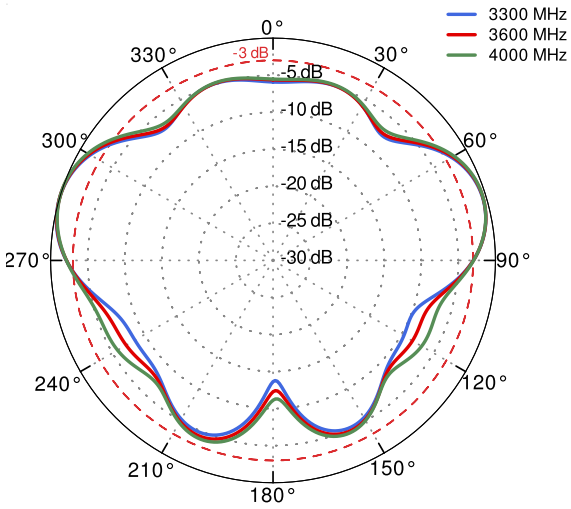

Copyright © 2023, Wireless Instruments. Specifications and information given in this document are subject to change without prior notice.

From 4.5GHz to 5.5GHz

ELEVATION

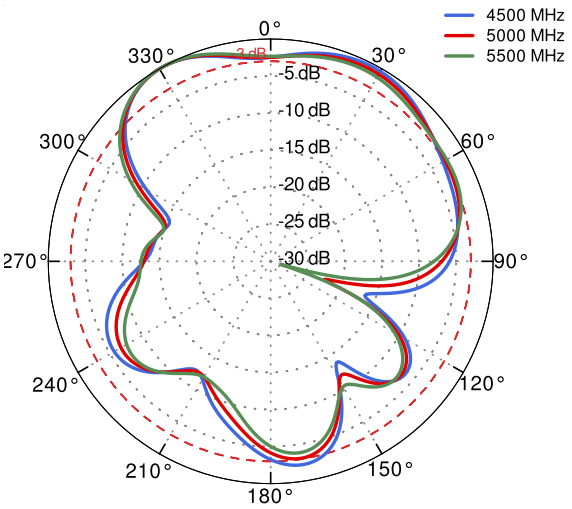

AZIMUTH

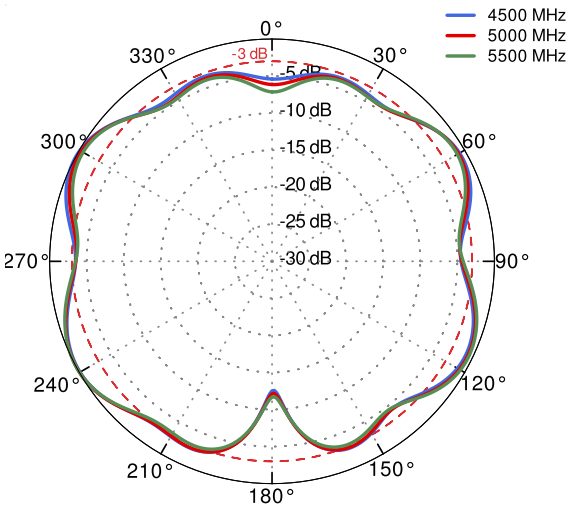

DIMENSIONS

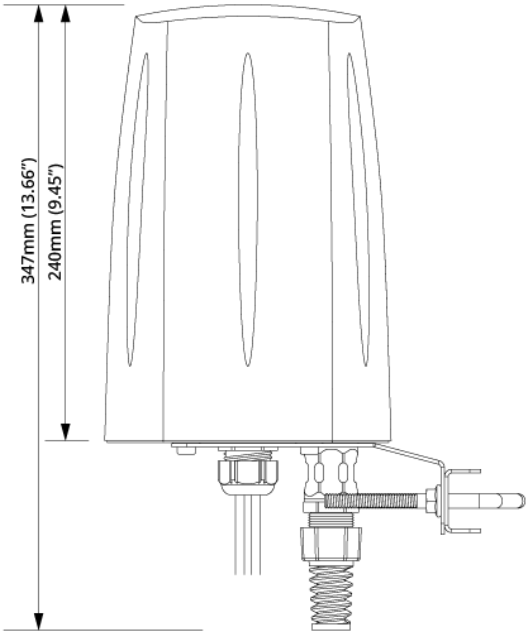

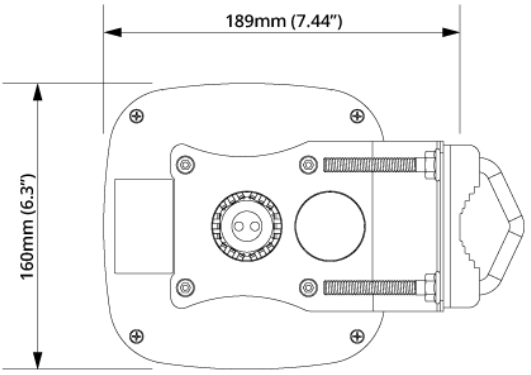

QuWireless

WWW.QUWIRELESS.COM

Sales email: sales@quwireless.com **Tel:** +48 513 900 416

Support email: support@quwireless.com **Website:** www.quwireless.com

Address: Wireless Instruments Sp. z o.o., ul. Kościuszki 27, 52-116 Iwiny, Poland

Copyright © 2023, Wireless Instruments. Specifications and information given in this document are subject to change without prior notice.