# QuPS2

## Outdoor power socket & plug - 2 PIN set

Outdoor power socket & plug 2 PIN set for all cases where the User doesn't want to use Passive PoE powering feature in all QuWireless antennas.



# MECHANICAL SPECIFICATION

| | |
|---|---|
| MAXIMUM CURRENT | 5A |
| MAXIMUM VOLTAGE | 200V |
| TEMPERATURE RANGE | -25...70°C |
| MINIMUM MATING CYCLE | 500x |
| MINIMUM MATING CYCLE FOR MOLEX CONNECTOR | 250x |
| INGRESS PROTECTION | IP68 |
| CONNECTOR TYPE | SP1310/P2I-N, 2 pin<br>Micro-Fit 3.0, 4 pin (2x2) |
| SP1310 CONNECTOR MATERIALS | Internal contacts material: Brass<br>Internal contact finishing: Gold |
| MICRO-FIT 3.0 CONNECTOR MATERIALS | Internal contacts material: Phosphor bronze<br>Internal contact finishing: Tin |
| CABLE TYPE | H05VV-F (OWY) 300/500V<br>2 cores 0,5mm$^2$, stranded wire, diameter 8mm, length 150mm |
| CONNECTOR PINOUT | 1 - Power (+)<br>2 - GND (-) |
| CONNECTOR FLAMMABILITY CLASS | UL94V-0 flammability class of plastic housing |
| ROHS COMPLIANCE | Directive 2011/65/EU<br>Directive 2015/863 |


Copyright © 2023, Wireless Instruments. Specifications and information given in this document are subject to change without prior notice.

| WEIGHT | 0.021 ± 0.005 kg<br>0.046 ± 0.011 lbs |
|---|---|

# DIMENSIONS

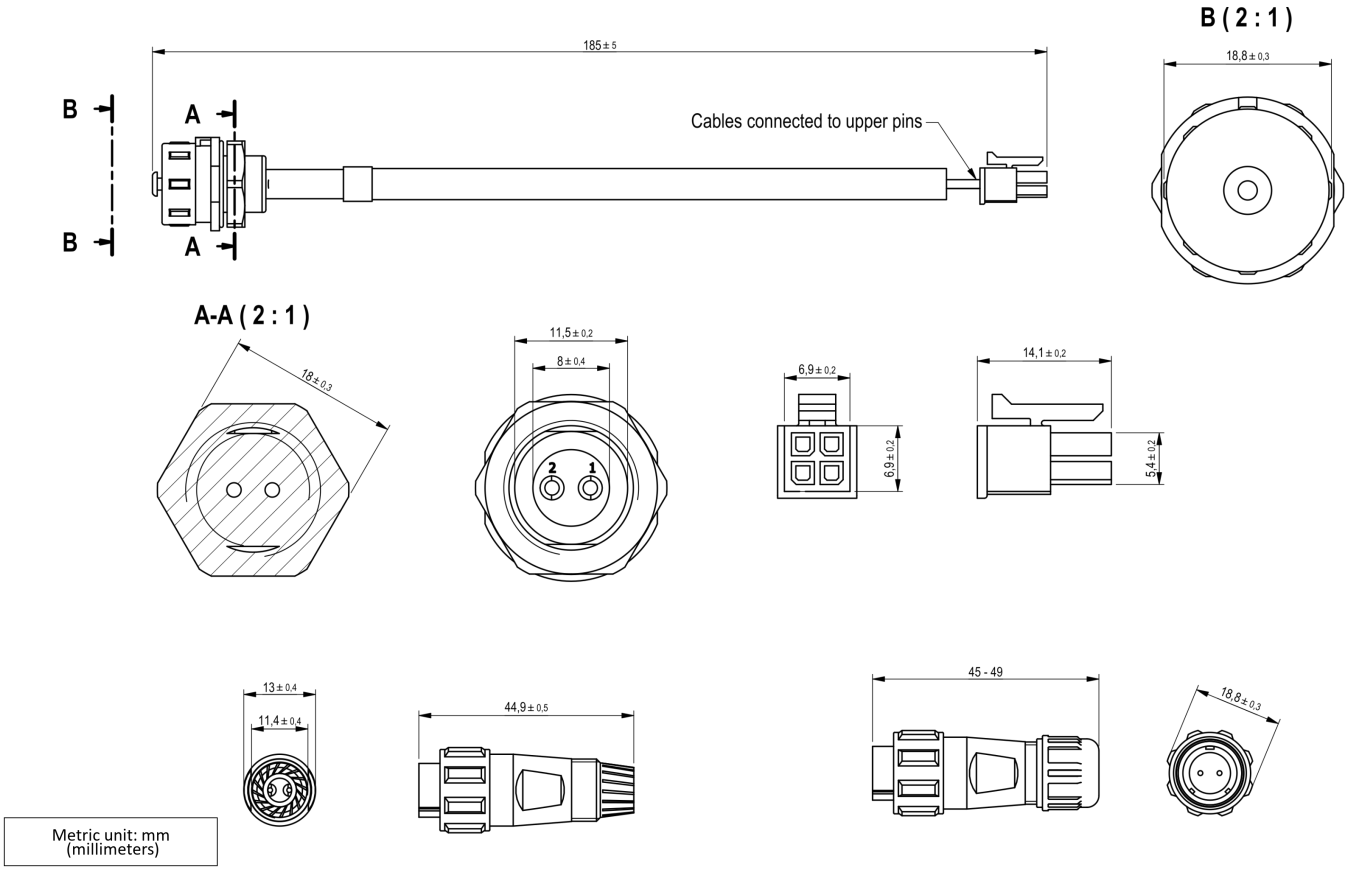


Metric unit: mm (millimeters)

QuWireless
WWW.QUWIRELESS.COM
**Sales email:** sales@quwireless.com **Tel:** +48 513 900 416
**Support email:** support@quwireless.com **Website:** www.quwireless.com
**Address:** Wireless Instruments Sp. z o.o., ul. Kościuszki 27, 52-116 Iwiny, Poland

Copyright © 2023, Wireless Instruments. Specifications and information given in this document are subject to change without prior notice.