QuSector 7V-120-2 Nf Wi-Fi 6E

QuSector 7V-120-2 offers a 120 degrees, 7dBi signal gain. It is a perfect indoor and outdoor device for industrial installations. Wi-Fi 6E support!

QuSector 7V-120-2 is a concurrent triple band, Vertical polarity, MIMO 2x2 panel antenna. It operates at 2.4GHz, 5GHz and 7GHz simultaneously with 7dBi gain. It is a futureproof solution with Wi-Fi 6E support.
Due to its medium gain, it can be used on short or medium distances, for example for hotspots in schools, stadiums, offices or public places. High quality injection moulded enclosure is characterized by a wide range of applications: from indoor through mobile devices to the outdoor (IP67) ones. Wide frequency range (2.4-2.5GHz & 5.0-7.125GHz) helps to find suitable frequency for the most effective operation.
The antenna comes with 2*Nf connectors.

Wi Fi 6E | 2.4GHz + 5GHz 6GHz + 7GHz | 7 dBi | DIRECTIONAL | IP 67 | -40° TO +80°



WI-FI ANTENNA SPECIFICATION

FREQUENCY	2.4 - 2.5 GHz 5.0 - 7.125 GHz
GAIN	2.4 - 2.5 GHz: 7 dBi 5.0 - 7.125 GHz: 7 dBi
VSWR	<1.80
BEAMWIDTH	120°/60° 120°/90°
POLARIZATION	Vertical
IMPEDANCE	50 Ω
SEPARATION BETWEEN CONNECTORS	>30dB
FRONT-TO-BACK	20dB
MAX INPUT POWER	50W
DC GROUND	Yes

MECHANICAL SPECIFICATION

MATERIAL	ASA
CONNECTOR	2xNf
OUTER DIMENSIONS	16.5 x 16.5 x 4.5 cm 6.5 x 6.5 x 1.77 inch
WEIGHT	0.9 kg
OPERATING TEMPERATURE	-40°C to +80°C -40°F to 176°F

Copyright © 2023, Wireless Instruments. Specifications and information given in this document are subject to change without prior notice.

MOUNTING KIT

MATERIAL	Galvanized
WEIGHT	0.3kg
MOUNTING PLACE	Mast
MAST DIAMETER	40-66 mm 1.57-2.60 inch

COMPATIBLE ROUTERS

VARIANT: S7V.120.2NF

TELTONIKA	RUT900, RUT901, RUT950, RUT951, RUT951 PoE+, RUT955, RUT956, RUT976, RUT981, RUT986, RUTM10, RUTM11, RUTM16, RUTM30, RUTM31, RUTM51, RUTM52, RUTM54, RUTM55, RUTM56, RUTX10, RUTX11, RUTX12, RUTX50
ROBUSTEL	EG5100, EG5120, EG5200, R1520 Global, R1520-4L (S), R1520-4L (V), R2010, R2011, R201x, R2120, R2120 5G, R2120 5G RedCap, R5020, R5020 Lite, R5030
RAJANT	BreadCrumb ES1-2450IS, BreadCrumb ES1-2450CS, BreadCrumb LX5-2255A, BreadCrumb LX5-2255B, BreadCrumb LX5-2255C, BreadCrumb LX5-2295C, BreadCrumb LX5-2455D, BreadCrumb LX5-2955C, Hawk BreadCrumb FE1-2450 / FE1-2450A, Peregrine LTE BreadCrumb FE1-2455LS, Peregrine LTE BreadCrumb FE1-2455LW, Sparrow BreadCrumb ME5-2450CS
ACKSYS	AirBox LTE, AirBox/10, AirLink, AirWan, AirXroad, AirXroad/4P, RuggedAir100
ADVANTECH	EKI-1361(-MB) EKI-1362, EKI-6233BN, EKI-6333AC-2GD
ANYBUS	Wireless Router WLAN, WLAN Access Point IP30, WLAN Access Point IP67

Copyright © 2023, Wireless Instruments. Specifications and information given in this document are subject to change without prior notice.

ARUBA	AP-204, AP-504, IAP-204, RAP-108
CISCO	Catalyst IW9165D
COMSET	CM210A-W, CM210Q-W, CM510Q-W, CM550W, CM580W, CM685V-1, CM685V-4, CM685V-6, CM685V-6-G, CM685VX, CM820Q-4, CM820Q-6, CM950W
D-LINK	DAP-1665, DAP-2020, DAP-2310, DAP-2360, DBA-3621P, DIS-2650AP, DWL-8720AP, N300 4G
DIGI	IX25, TX54 LTE-Advanced, TX64, WR44 RR
ENGENIUS	ENS500EXT
ERICSSON (CRADLEPOINT)	E300, IBR600C, IBR900, R1900, R500, R920, R980, S700, W4005
EXTREME NETWORKS	AP 3917, AP 7522, AP 7522E, AP122X, AP305CX
FORTINET	FAP-233G, FAP-U432F
FOUR-FAITH	5G Industrial Router F-NR100, 5G SIM WiFi Router F-NR120, 5G Smart Light Pole Gateway F-G300, Edge Computing Gateway F-G100
HUAWEI	AP4051DN, AP4130DN, AP4151DN
INHAND	IR315
MERU	AP1010E
MIKROTIK	L009UiGS-2HaxD-IN, L11UG-5HaxD, RB922
MOXA	AWK-1131A Series, AWK-1137C Series, AWK-1151C Series, AWK-3131A Series, AWK-3252A Series, AWK-4131A Series, AWK-4252A Series, TAP-213 Series
PEPLINK	AP One Rugged, B One, Balance 20X, BR1 Pro (CAT-20), BR1 Pro CAT-20, BR2 PRO, MAX BR1 Mini M2M, MAX BR1 MK2, MAX BR1 Pro, MAX BR1 Pro 5G, MAX Transit, MAX Transit Duo Pro, UBR Plus

Copyright © 2023, Wireless Instruments. Specifications and information given in this document are subject to change without prior notice.

PERLE	IOLAN SCG W Secure Console Server, IOLAN SCG WM Secure Console Server, IOLAN SDG W Serial Device Servers, IRG5520, IRG5521, IRG5541
PROROUTE	H685 LTE 4G CAT6 Router, H685 WRT M2M 5G Router, H900 5G Router
RAJANT	BreadCrumb ES1-2450IS, BreadCrumb ES1–2450CS, BreadCrumb LX5-2255A, BreadCrumb LX5-2255B, BreadCrumb LX5-2255C, BreadCrumb LX5-2295C, BreadCrumb LX5-2455D, BreadCrumb LX5-2955C, Hawk BreadCrumb FE1-2450 / FE1-2450A, Peregrine LTE BreadCrumb FE1-2455LS, Peregrine LTE BreadCrumb FE1-2455LW, Sparrow BreadCrumb ME5-2450CS
ROBUSTEL	EG5100, EG5120, EG5200, R1520 Global, R1520-4L (S), R1520-4L (V), R2010, R2011, R201x, R2120, R2120 5G, R2120 5G RedCap, R5020, R5020 Lite, R5030
RUCKUS	T350SE
SEMTECH (SIERRA WIRELESS)	AirLink RV55, AirLink RX55, AirLink XR60
SIEMENS	6GK5763-1AL00-7DA0, 6GK5766-1GE00-7DB0, 6GK5763-1AL00-3AA0, 6GK5763-1AL00-3DA0, 6GK5763-1AL00-7DB0, 6GK5766-1GE00-3DA0, 6GK5766-1GE00-3DB0, 6GK5766-1GE00-7DA0, 6GK5766-1GE00-7TA0, 6GK5766-1GE00-7TB0, Scalance W734 RJ45, Scalance W738 M12, Scalance W774 M12 EEC, Scalance W774 RJ45, Scalance W778-1 M12, Scalance W778-1 M12 EEC, SCALANCE W786
TELTONIKA	RUT900, RUT901, RUT950, RUT951, RUT951 PoE+, RUT955, RUT956, RUT976, RUT981, RUT986, RUTM10, RUTM11, RUTM16, RUTM30, RUTM31, RUTM51, RUTM52, RUTM54, RUTM55, RUTM56, RUTX10, RUTX11, RUTX12, RUTX50
WAVETEL	W240 4G/LTE, W2400 LTE , W3600 4G/LTE Dual WAN, W4600, W4600-NR 5G, W4600-S2, WNR320 5G, WNR340 5G, WNR5601 5G
WLINK	ER120, G200, G230, G510, G520, G530, G530, R220, R520
XIRRUS	XR-520H

Copyright © 2023, Wireless Instruments. Specifications and information given in this document are subject to change without prior notice.

ZYXEL	LTE3301-PLUS, NWA55AXE
OTHER	2 * N-male, 2 * RPSMA, 2 * RPTNC

PLOTS

VSWR

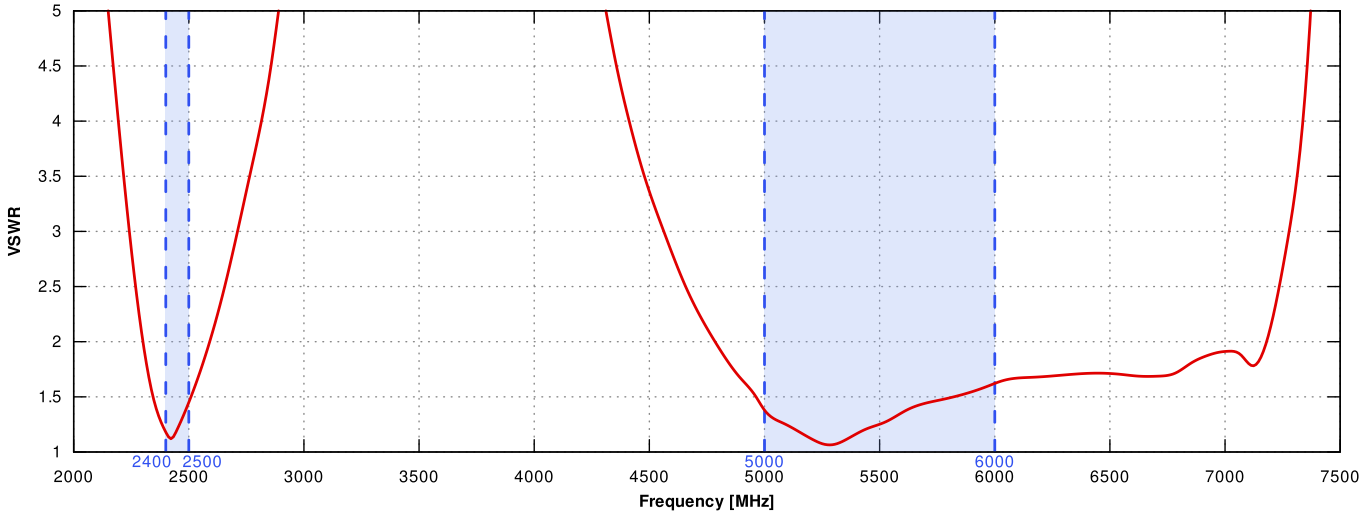

Gain

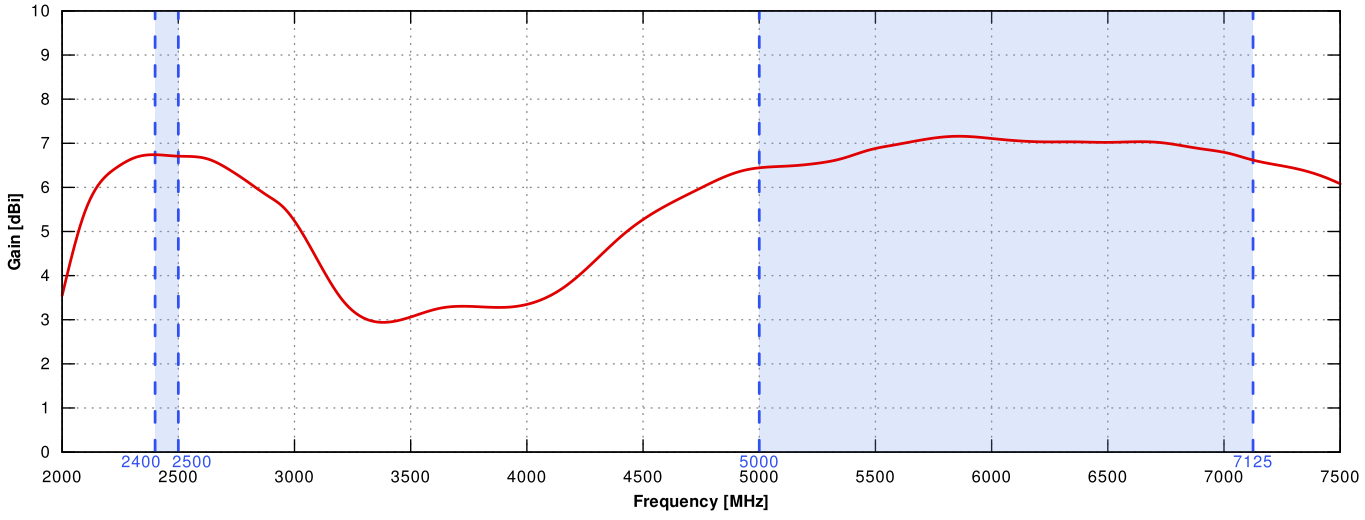

Copyright © 2023, Wireless Instruments. Specifications and information given in this document are subject to change without prior notice.

From 2.4GHz to 2.5GHz

AZIMUTH

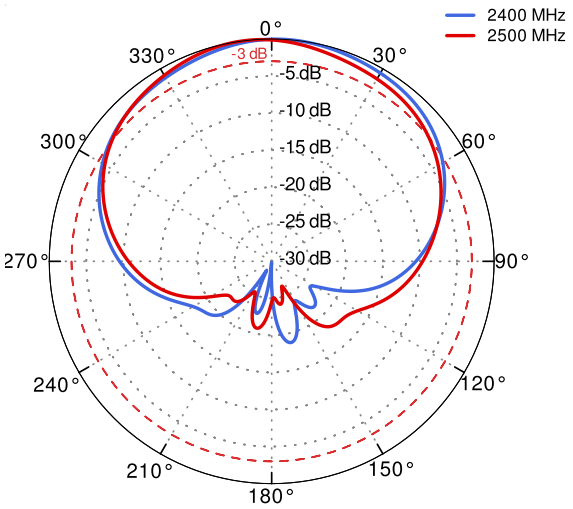

ELEVATION

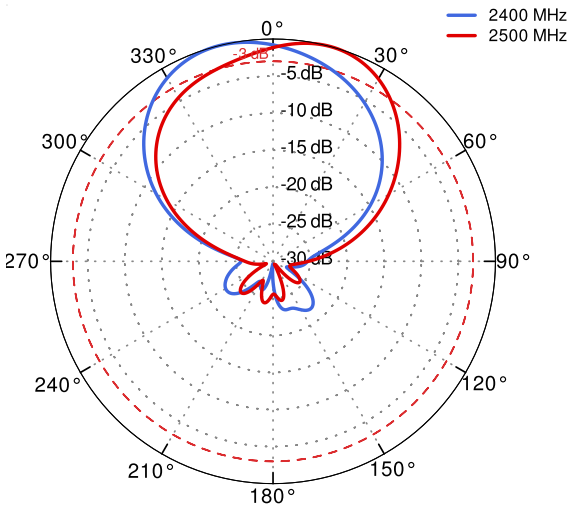

From 5.1GHz to 6.9GHz

AZIMUTH

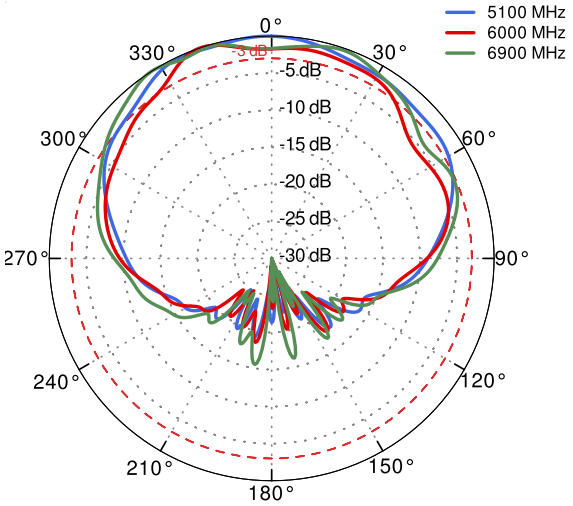

ELEVATION

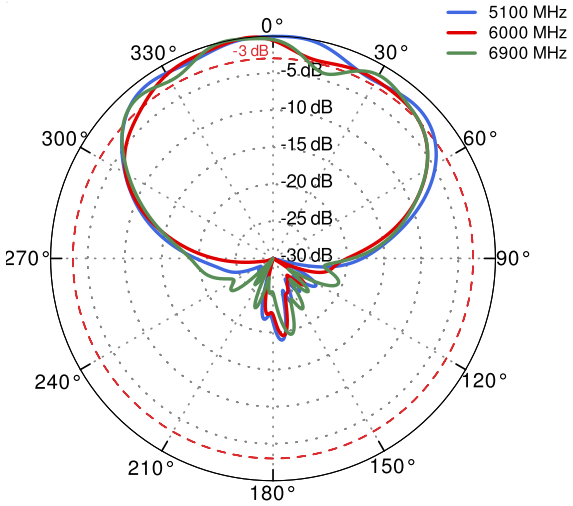

Copyright © 2023, Wireless Instruments. Specifications and information given in this document are subject to change without prior notice.

DIMENSIONS

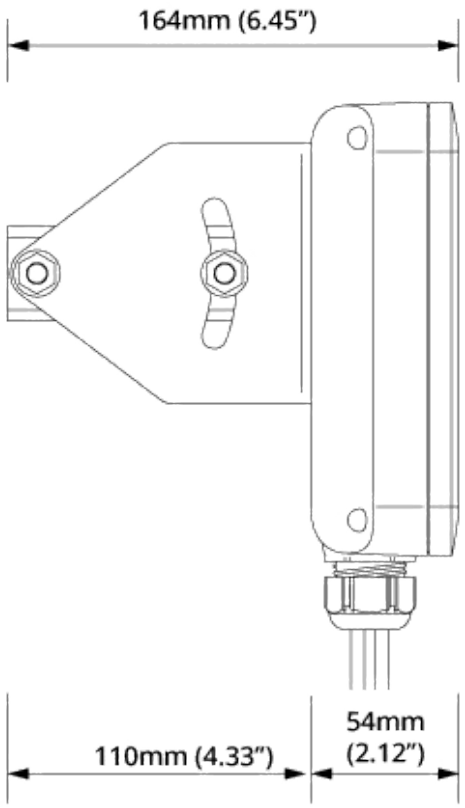

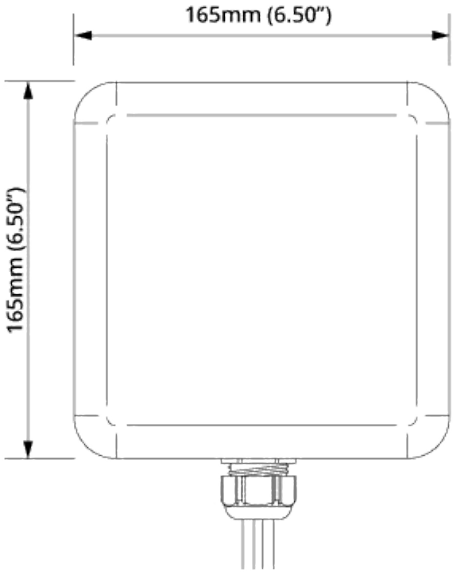

QuWireless
WWW.QUWIRELESS.COM
Sales email: sales@quwireless.com **Tel:** +48 513 900 416
Support email: support@quwireless.com **Website:** www.quwireless.com
Address: Wireless Instruments Sp. z o.o., ul. Kościuszki 27, 52-116 Iwiny, Poland

Copyright © 2023, Wireless Instruments. Specifications and information given in this document are subject to change without prior notice.