QuSector S24-19HV-20-2

QuSector S24-19HV-20-2 offers a 20 degrees, 19dBi gain signal with two 2.4GHz connectors. It is a perfect indoor and outdoor device for industrial installations.

QuSector S24-19HV-20-2 is a single band, H&V polarity, MIMO 2x2 panel antenna. Two connectors operate at 2.2 - 2.5 GHz with 19dBi gain. Due to its medium gain, it can be used on short or medium distances, for example for hotspots in schools, stadiums, offices or public places. High quality injection moulded enclosure allows to implement it alongside with indoor and IP67 outdoor solutions. The antenna comes in with 2*70cm (28inch) cables terminated with Nm, RPSMA, RPTNC connectors. QuSector S24-19HV-20-2 was designed to be a perfect match for your access point.

Wi Fi 2.4GHz | 2x2 MIMO | 2.4GHz | 19 dBi | DIRECTIONAL | IP 67 | -40° TO +80°

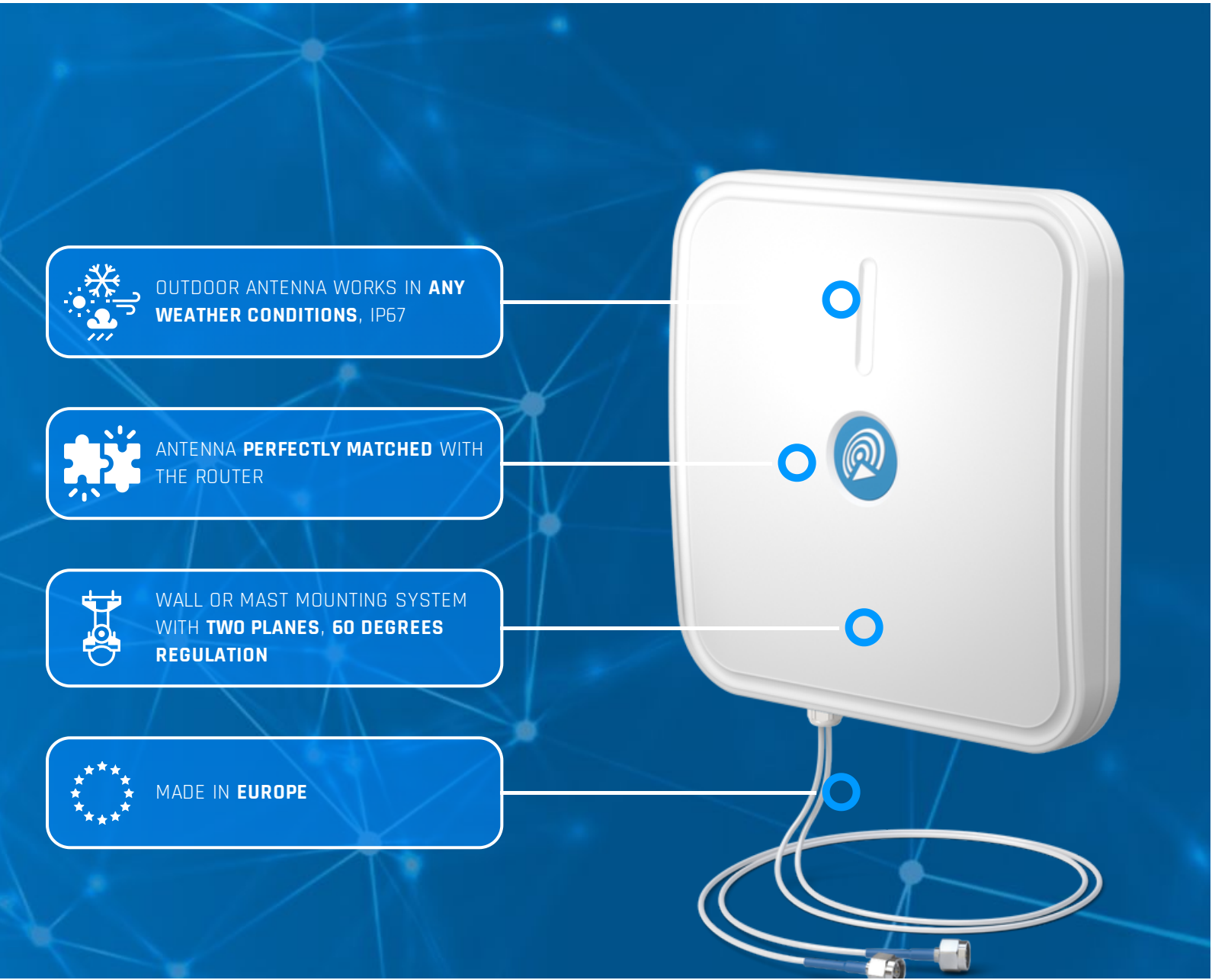

WI-FI SPECIFICATION

FREQUENCY	2.2 - 2.5GHz
GAIN	19 dBi
VSWR	<1.40, max <1.70
BEAMWIDTH	20°/20°
POLARIZATION	Horizontal Vertical
IMPEDANCE	50 Ω
SEPARATION BETWEEN CONNECTORS	> 32dB
FRONT-TO-BACK	> 25dB
MAX INPUT POWER	50W
DC GROUND	Yes

MECHANICAL SPECIFICATION

MATERIAL	ASA
CONNECTOR	2xRPSMA/2xNM/2xRPTNC
OUTER DIMENSIONS	390 x 392 x 80 mm 15.35 x 15.43 x 3.14 inch
WEIGHT	2.5 kg
OPERATING TEMPERATURE	-40°C to +80°C -40°F to 176°F

Copyright © 2023, Wireless Instruments. Specifications and information given in this document are subject to change without prior notice.

MOUNTING KIT

DIMENSIONS	9.9 x 10.5 x 14.8 cm 3.9 x 4.13 x 5.83 inch
REGULATION RANGE	+/- 30°
MAST DIAMETER RANGE	25 - 66mm 0.98-2.60 inch
MATERIAL	Polyamide with fiberglass + galvanized steel U-Bolts
MOUNTING PLACE	Wall or ceiling or mast

COMPATIBLE ROUTERS

VARIANT: SS24.19HV.20.2RS

TELTONIKA	RUT900, RUT901, RUT950, RUT951, RUT955, RUT956
ROBUSTEL	R1520 Global, R1520-4L (S), R1520-4L (V), R2010, R2011
D-LINK	DAP-2310, DAP-2360
ERICSSON (CRADLEPOINT)	IBR600C
ROBUSTEL	R1520 Global, R1520-4L (S), R1520-4L (V), R2010, R2011
TELTONIKA	RUT900, RUT901, RUT950, RUT951, RUT955, RUT956
WAVETEL	W240 4G/LTE

Copyright © 2023, Wireless Instruments. Specifications and information given in this document are subject to change without prior notice.

VARIANT: SS24.19HV.20.2NM

RAJANT	BreadCrumb ES1-2450CS, BreadCrumb LX5-2255B, BreadCrumb LX5-2255C, BreadCrumb LX5-2295C, BreadCrumb LX5-2455D, BreadCrumb LX5-2955C, Hawk BreadCrumb FE1-2450 / FE1-2450A, Peregrine LTE BreadCrumb FE1-2455LS, Peregrine LTE BreadCrumb FE1-2455LW, Sparrow BreadCrumb ME5-2450CS
RAJANT	BreadCrumb ES1-2450CS, BreadCrumb LX5-2255B, BreadCrumb LX5-2255C, BreadCrumb LX5-2295C, BreadCrumb LX5-2455D, BreadCrumb LX5-2955C, Hawk BreadCrumb FE1-2450 / FE1-2450A, Peregrine LTE BreadCrumb FE1-2455LS, Peregrine LTE BreadCrumb FE1-2455LW, Sparrow BreadCrumb ME5-2450CS

VARIANT: SS24.19HV.20.2RT

PLOTS

From 2.4GHz to 2.5GHz

PORT 1 ELEVATION

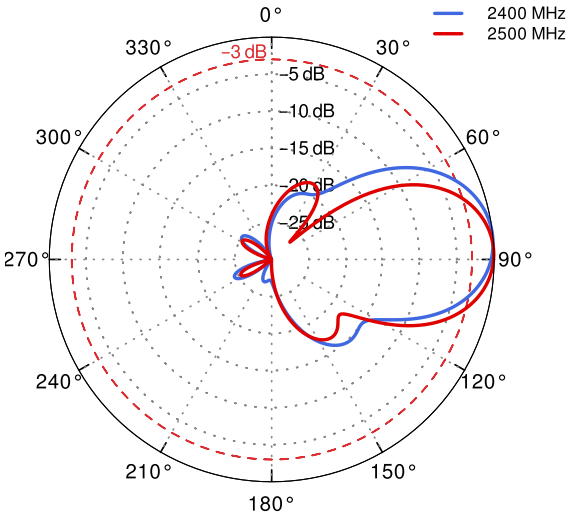

PORT 1 AZIMUTH

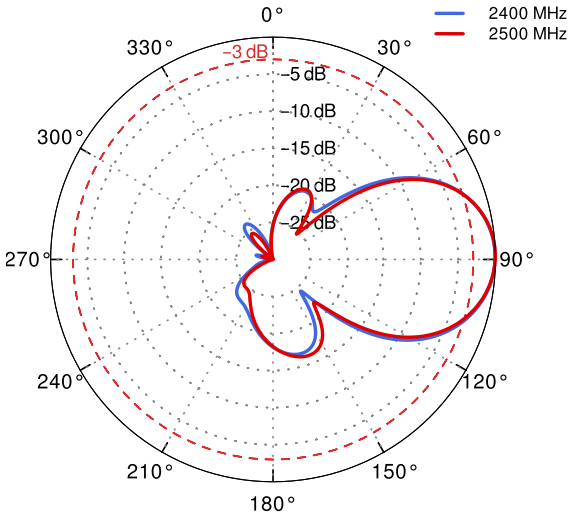

Copyright © 2023, Wireless Instruments. Specifications and information given in this document are subject to change without prior notice.

From 2.4GHz to 2.5GHz

PORT 2 ELEVATION

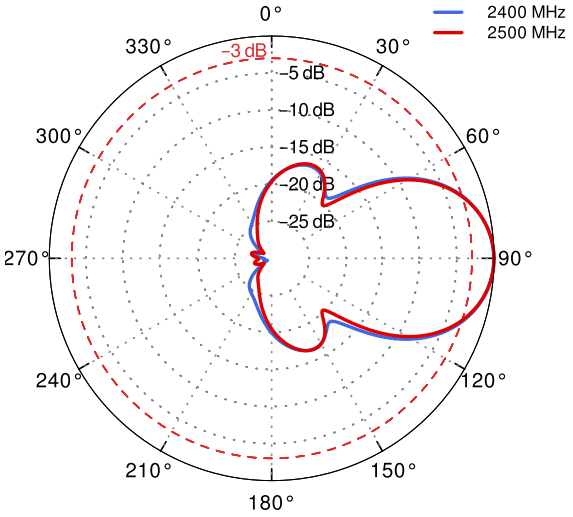

PORT 2 AZIMUTH

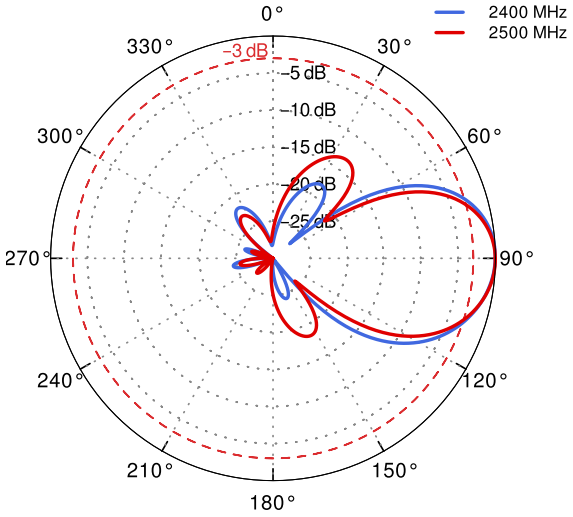

DIMENSIONS



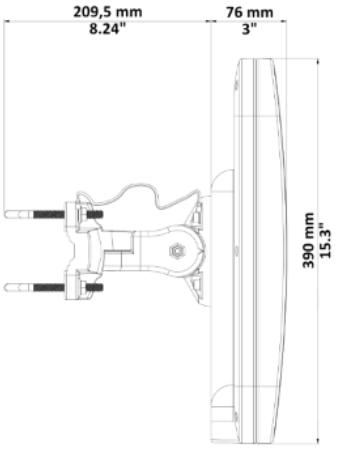

QuWireless
WWW.QUWIRELESS.COM

Sales email: sales@quwireless.com **Tel:** +48 513 900 416

Support email: support@quwireless.com **Website:** www.quwireless.com

Address: Wireless Instruments Sp. z o.o., ul. Kościuszki 27, 52-116 Iwiny, Poland

Copyright © 2023, Wireless Instruments. Specifications and information given in this document are subject to change without prior notice.