QuSpot for Teltonika RUT14x

INTEGRATED MULTI-BAND WI-FI 6E OMNI ANTENNA + PLACE TO INSTALL TELTONIKA RUT14x (ALL-IN-ONE)

QuSpot antenna for Teltonika RUT14x router is a perfect outdoor device for mobile and fixed installations like industrial, CCTV, hotspots, yachts, boats, campers, RV etc. It has embedded omni Wi-Fi 6E antenna. If you use RUT14x with QuSpot antenna, you get an integrated complete solution with embedded router and multi band antenna in one enclosure.
Wi-Fi 6E support!

Wi Fi 6E | 7 dBi | 2.4GHz + 5GHz | OMNI DIRECTIONAL | IP 68 | -40° TO +80°

- OUTDOOR ANTENNA WORKS IN ANY WEATHER CONDITIONS, IP68
- GALVANIZED STEEL, WALL OR POLE MOUNTING BRACKET
- ANTENNA PERFECTLY MATCHED WITH THE TELTONIKA RUT14X
- ALL ANTENNAS AND TELTONIKA ROUTER INTEGRATED IN ONE ENCLOSURE
- MADE IN **EUROPE**

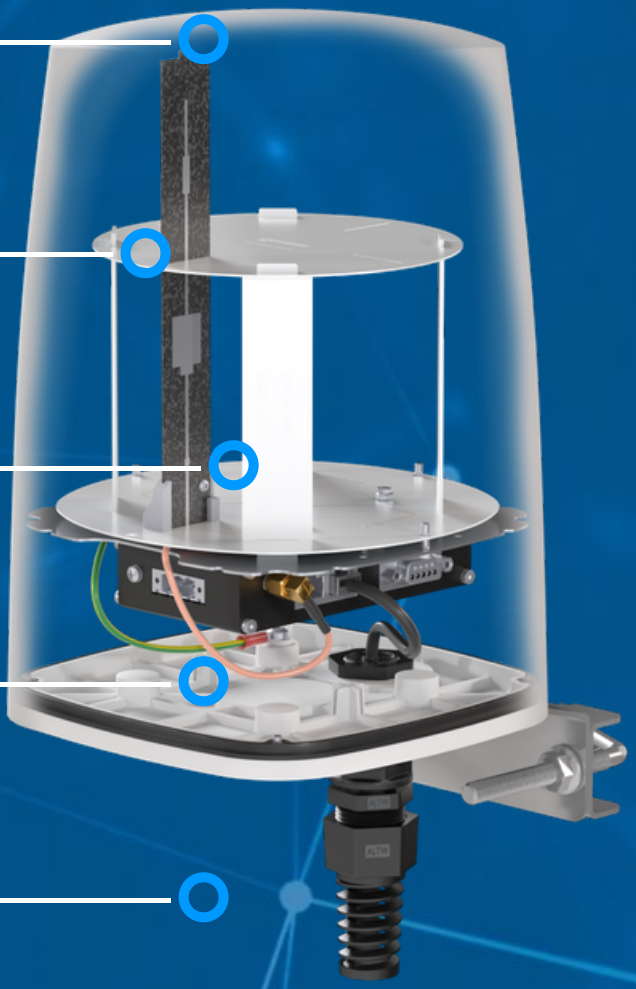

WI-FI ANTENNA SPECIFICATION

FREQUENCY	2.4 - 2.5 GHz 5.0 - 7.2 GHz
GAIN	2.4 - 2.5 GHz: 6dBi 5 GHz: 7.5dBi 7 GHz: 7.5dBi
VSWR	< 1.50, max < 2.00
BEAMWIDTH	360°/25°
POLARIZATION	Vertical
IMPEDANCE	50 Ω

MECHANICAL SPECIFICATION

RADOME MATERIAL	UV-resistant ASA
OPERATING HUMIDITY	up to 100% RH
MATERIALS	aluminum, PTFE
CONNECTOR TYPE	RJ45
INGRESS PROTECTION	IP68
DIMENSIONS	160 x 160 x 240 mm 6.3 x 6.3 x 9.45 inch
WEIGHT	1.5 kg 3.31 lbs
OPERATING TEMPERATURE	From -40°C to 80°C From -40°F to 176°F

Copyright © 2023, Wireless Instruments. Specifications and information given in this document are subject to change without prior notice.

ENCLOSURE RECOMMENDED TIGHTENING TORQUE	0.5 - 0.7 Nm
MAST DIAMETER	25-66 mm 0.98-2.60 inch

PLOTS

WI-FI VSWR

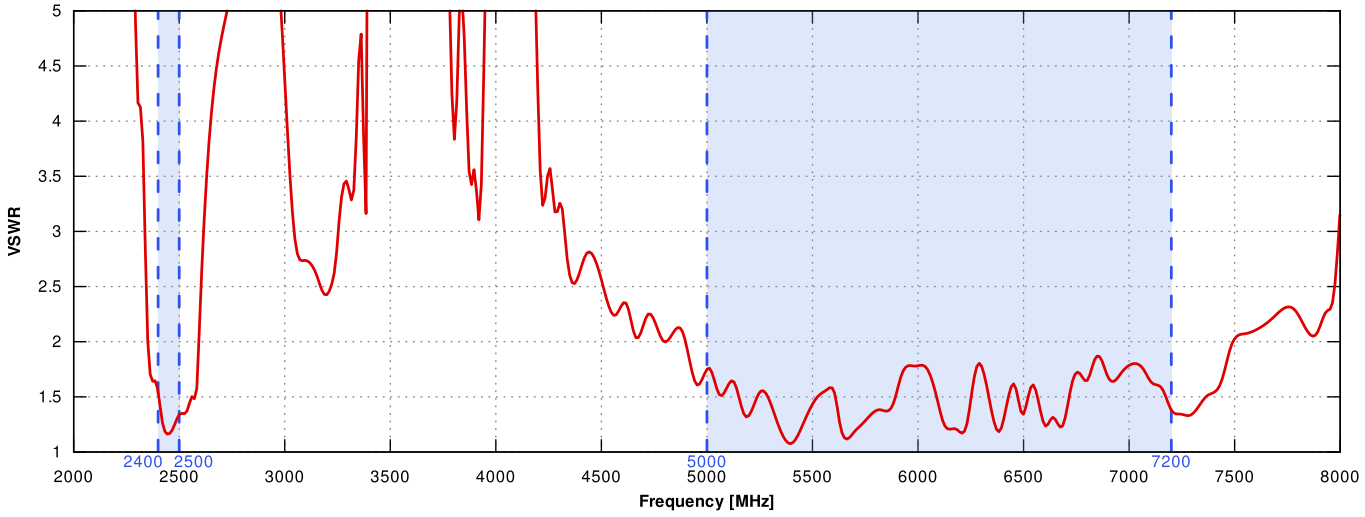

Copyright © 2023, Wireless Instruments. Specifications and information given in this document are subject to change without prior notice.

WI-FI Gain

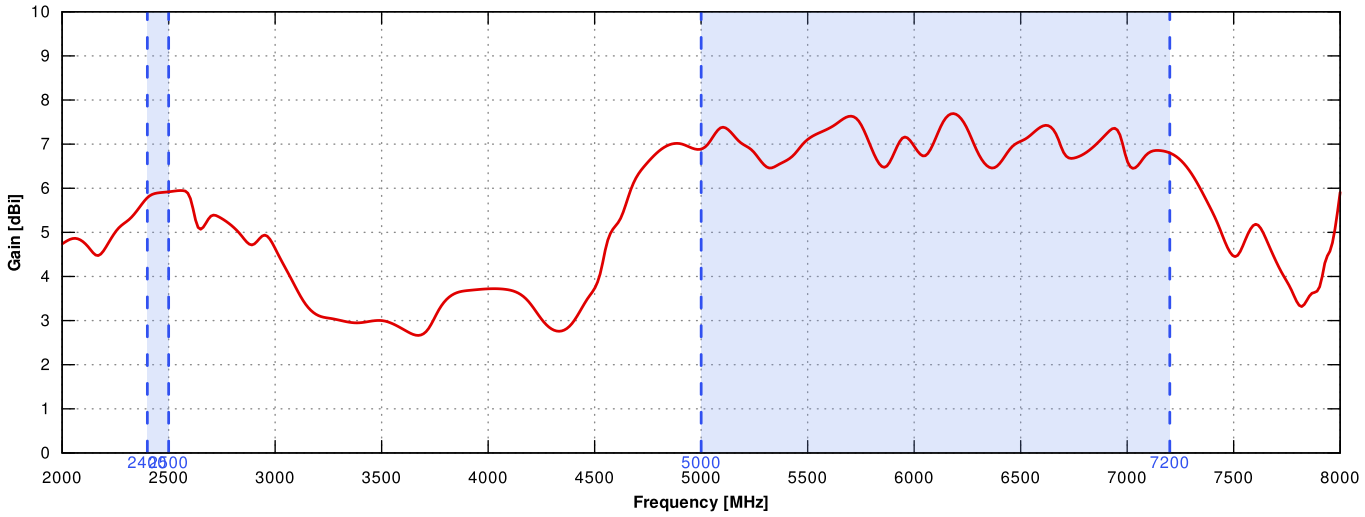

Wi-Fi From 2.4 GHz to 6.5 GHz

ELEVATION

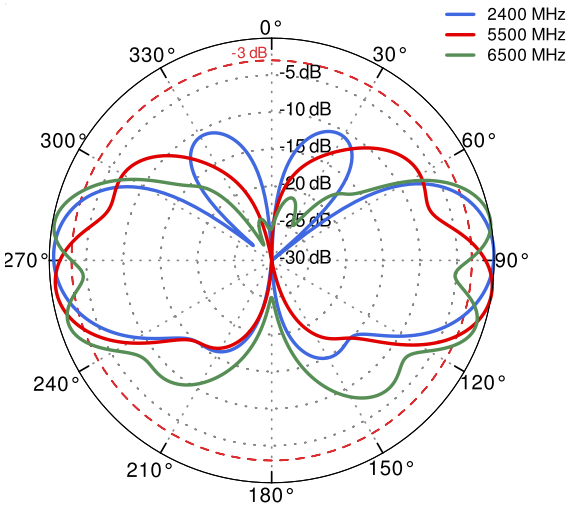

AZIMUTH

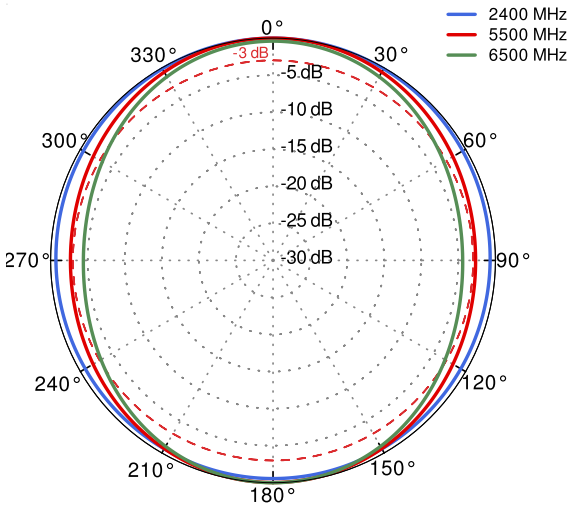

Copyright © 2023, Wireless Instruments. Specifications and information given in this document are subject to change without prior notice.

DIMENSIONS

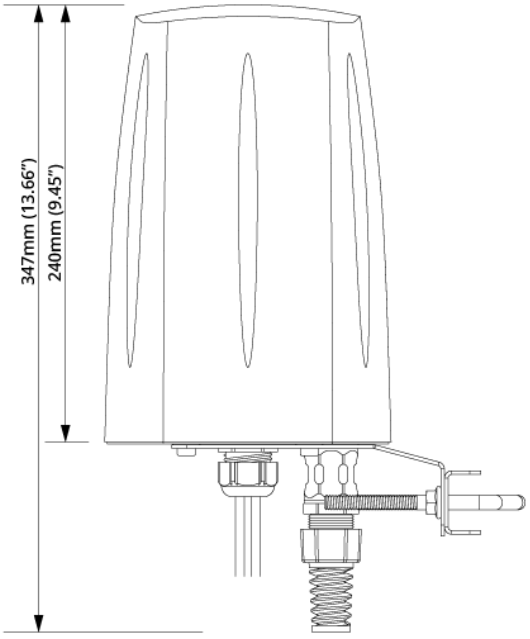

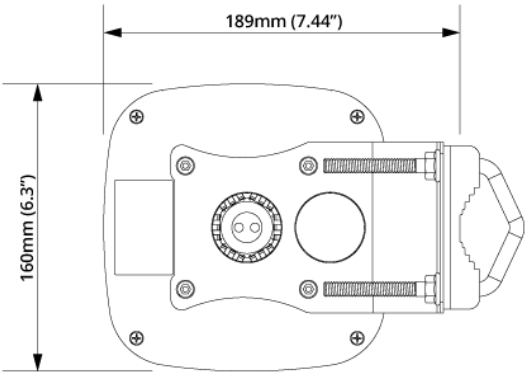

QuWireless
WWW.QUWIRELESS.COM
Sales email: sales@quwireless.com **Tel:** +48 513 900 416
Support email: support@quwireless.com **Website:** www.quwireless.com
Address: Wireless Instruments Sp. z o.o., ul. Kościuszki 27, 52-116 Iwiny, Poland

Copyright © 2023, Wireless Instruments. Specifications and information given in this document are subject to change without prior notice.