# QuWave for Teltonika ATRM50

## INTEGRATED MULTI-BAND 5G OMNI ANTENNA + WI-FI 6E OMNI ANTENNA + GPS ANTENNA + PLACE TO INSTALL TELTONIKA (ALL-IN-ONE)

**QuWave for Teltonika** ATRM50 is a perfect outdoor device for mobile and fixed installations like industrial, CCTV, hotspots, yachts, boats, campers, RV etc. It has embedded **omni 5G, omni Wi-Fi 6E and GPS antenna**. If you use Teltonika router with QuWave antenna, you get an integrated complete solution with embedded router and multi band antennas in one enclosure.

5G | BAND 71 | 4x4 MIMO | 617-6000MHz | 4 dBi | OMNI DIRECTIONAL | Wi Fi 6E | GPS | IP 68 | -40° TO +80°

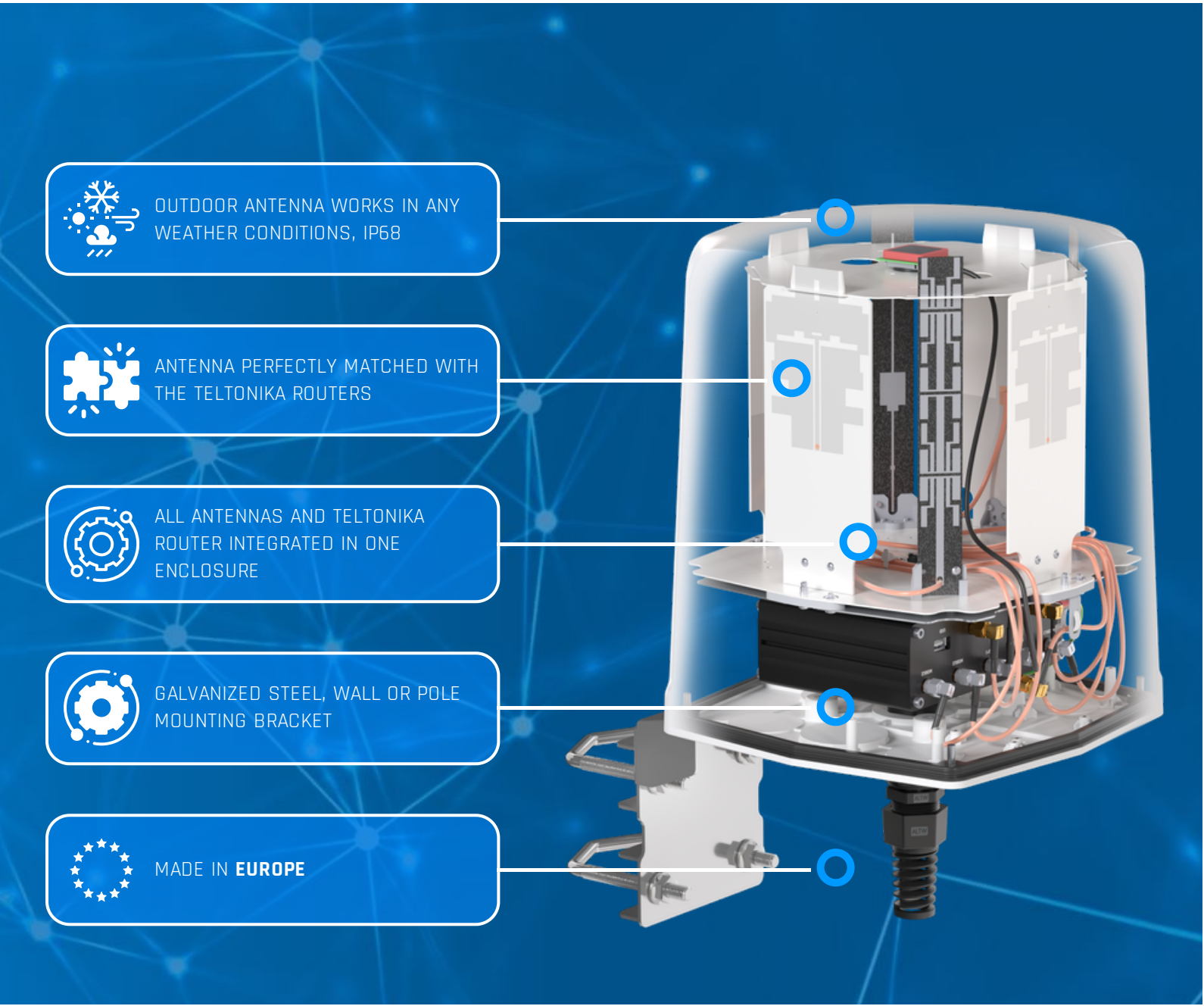

# 5G / LTE ANTENNA SPECIFICATION

| | |
|---|---|
| FREQUENCY | 617 - 960 MHz<br>1.7 - 2.7 GHz<br>3.3 - 4.7 GHz<br>5.2 - 6.0 GHz |
| GAIN | 617 - 960 MHz : 4 dBi<br>1.7 - 2.2 GHz : 4 dBi<br>3.3 - 4.7 GHz : 4.5 dBi<br>5.2 - 6.0 GHz : 2.5dBi |
| SUPPORTED LTE BANDS | 1, 2, 3, 4, 5, 7, 8, 9, 10, 12, 13, 14, 17, 18, 19, 20, 22, 25, 26, 27, 28, 29, 30, 33, 34, 35, 36, 37, 38, 39, 40, 41, 42, 43, 44, 47, 48, 49, 52, 53, 65, 66, 67, 68, 69, 71, 85, 103, 106 |
| SUPPORTED 5G BANDS | n1, n2, n3, n5, n7, n8, n12, n13, n14, n18, n20, n25, n26, n28, n29, n30, n34, n38, n39, n40, n41, n47, n48, n53, n65, n66, n67, n71, n77, n78, n80, n81, n82, n83, n84, n85, n86, n89, n90, n95, n97, n98, n100, n101, n256 |
| VSWR | <1.80, max <2.00 |
| BEAMWIDTH | 360°/35° ±5° |
| POLARIZATION | Vertical |
| IMPEDANCE | 50 Ω |


Copyright © 2023, Wireless Instruments. Specifications and information given in this document are subject to change without prior notice.

# WI-FI ANTENNA SPECIFICATION

| | |
|---|---|
| FREQUENCY | 2.4 GHz<br>5.0 GHz<br>7 GHz |
| GAIN | 2.4 - 2.5 GHz: 6dBi<br>5 GHz: 7.5dBi<br>7 GHz: 7.5dBi |
| VSWR | < 1.50, max < 2.00 |
| BEAMWIDTH | 360°/25° |
| POLARIZATION | Vertical |
| IMPEDANCE | 50 Ω |

# MECHANICAL SPECIFICATION

| | |
|---|---|
| RADOME MATERIAL | UV-resistant ASA |
| OPERATING HUMIDITY | up to 100% RH |
| MATERIALS | aluminum, PTFE |
| CONNECTOR TYPE | 1x QuRJ45 |
| OUTER DIMENSIONS | 210 x 210 x 254 mm<br>8.27 x 8.27 x 10 inch |
| INGRESS PROTECTION | IP68 |
| OPERATING TEMPERATURE | From -40°C to 80°C<br>From -40°F to 176°F |
| MAST DIAMETER | 25-66 mm<br>0.98-2.60 inch |


Copyright © 2023, Wireless Instruments. Specifications and information given in this document are subject to change without prior notice.

| | |
|---|---|
| **ENCLOSURE RECOMMENDED TIGHTENING TORQUE** | 0.5 - 0.7 Nm |

# FREQUENCY BANDS

**LTE / 4G**

617 MHz — 6000 MHz

| | | | | | | |
|---|---|---|---|---|---|---|
| 1 | 2 | 3 | 4 | 5 | 7 | 8 |
| 9 | 10 | 12 | 13 | 14 | 17 | 18 |
| 19 | 20 | 22 | 25 | 26 | 27 | 28 |
| 29 | 30 | 33 | 34 | 35 | 36 | 37 |
| 38 | 39 | 40 | 41 | 42 | 43 | 44 |
| 47 | 48 | 49 | 52 | 53 | 65 | 66 |
| 67 | 68 | 69 | 71 | 85 | 103 | 106 |

**5G**

617 MHz — 6000 MHz

| | | | | | | |
|---|---|---|---|---|---|---|
| n1 | n2 | n3 | n5 | n7 | n8 | n12 |
| n13 | n14 | n18 | n20 | n25 | n26 | n28 |
| n29 | n30 | n34 | n38 | n39 | n40 | n41 |
| n47 | n48 | n53 | n65 | n66 | n67 | n71 |
| n77 | n78 | n80 | n81 | n82 | n83 | n84 |
| n85 | n86 | n89 | n90 | n95 | n97 | n98 |
| n100 | n101 | n256 | | | | |


Copyright © 2023, Wireless Instruments. Specifications and information given in this document are subject to change without prior notice.

# COMPATIBLE ROUTERS

VARIANT: -

# PLOTS

## 5G/LTE VSWR

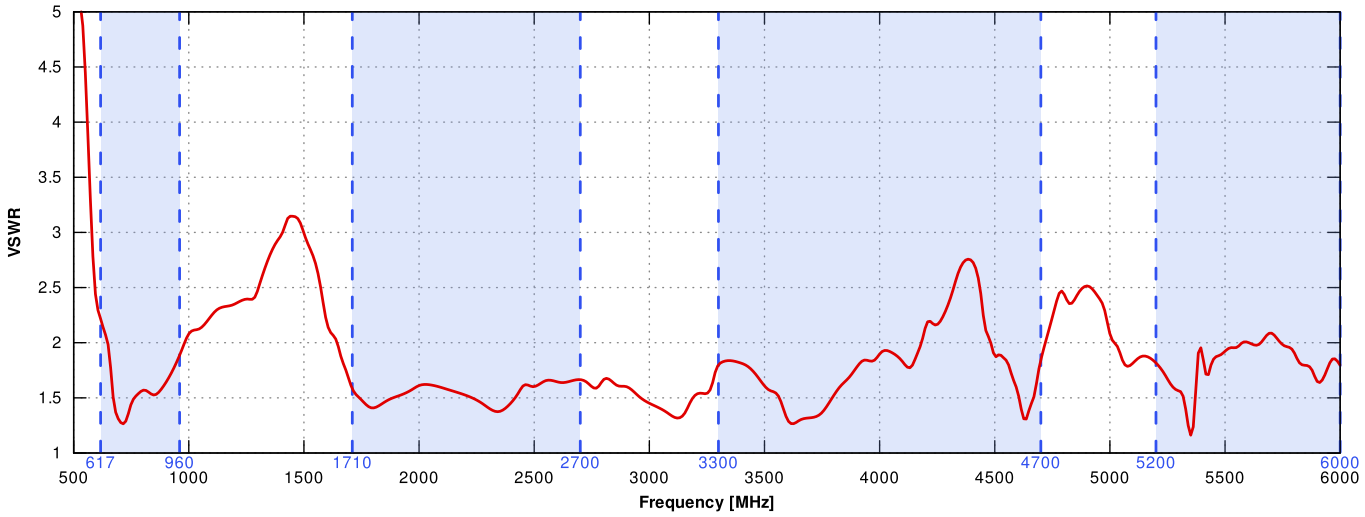



Copyright © 2023, Wireless Instruments. Specifications and information given in this document are subject to change without prior notice.

## WI-FI VSWR

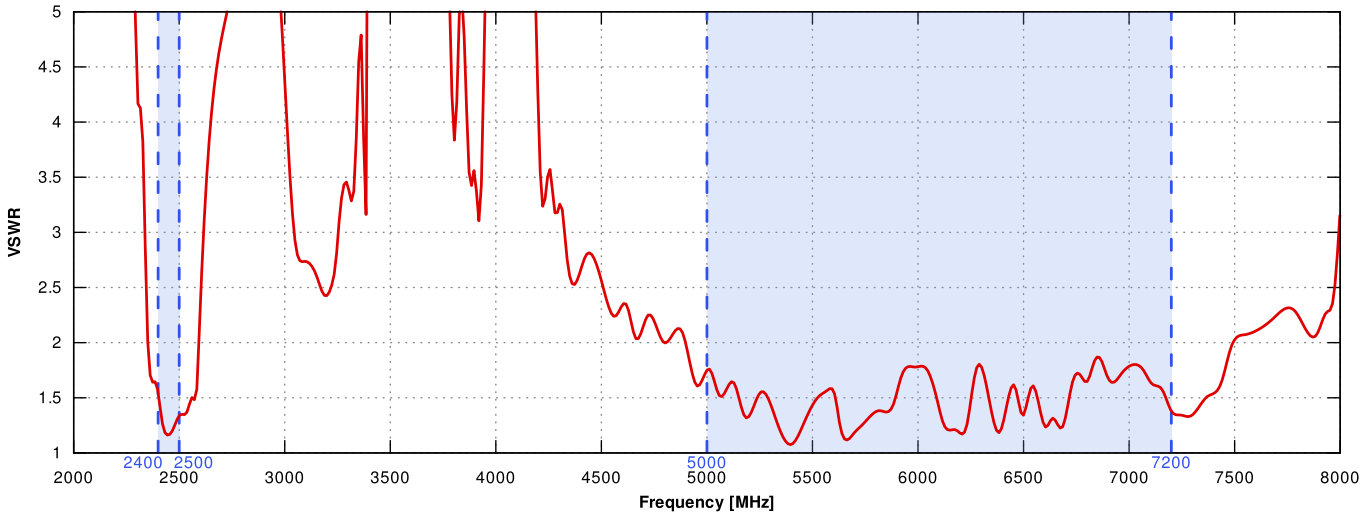


# DIMENSIONS

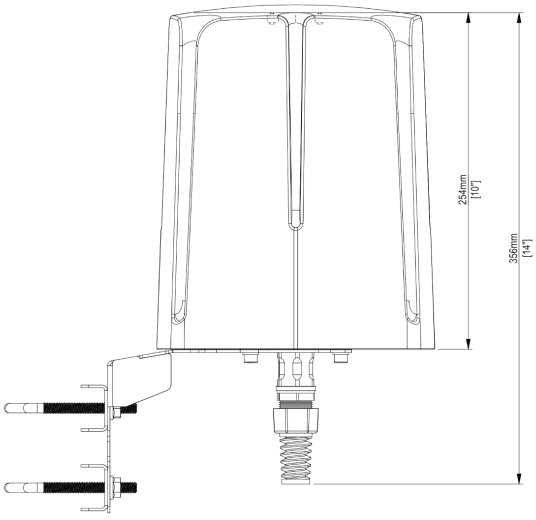


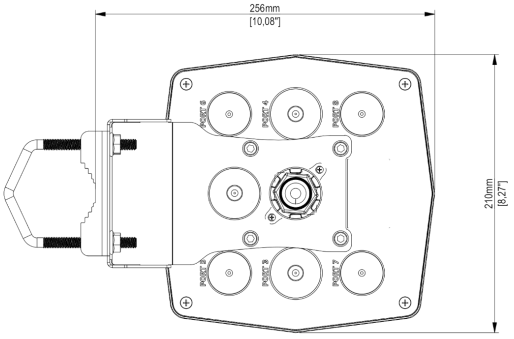


QuWireless
WWW.QUWIRELESS.COM
**Sales email:** sales@quwireless.com **Tel:** +48 513 900 416
**Support email:** support@quwireless.com **Website:** www.quwireless.com
**Address:** Wireless Instruments Sp. z o.o., ul. Kościuszki 27, 52-116 Iwiny, Poland

Copyright © 2023, Wireless Instruments. Specifications and information given in this document are subject to change without prior notice.