QuWireless

DATASHEET / -
VERSION / 2.60

QuWave for Ericsson R980 DC

INTEGRATED MULTI-BAND 5G OMNI ANTENNA + WI-FI 6E OMNI ANTENNA + GPS ANTENNA + PLACE TO INSTALL ERICSSON R980 (ALL-IN-ONE)

QuWave for Ericsson R980 DC is a perfect outdoor device for mobile and fixed installations like industrial, CCTV, hotspots, yachts, boats, campers, RV etc. It has embedded **omni 5G, omni Wi-Fi 6E and GPS antenna**. The device has two RJ45 connectors and a socket for power supply from a DC installation. If you use R980 with QuWave antenna, you get an integrated complete solution with embedded router and multi band antennas in one enclosure.

Wi-Fi 6E support!

5G | BAND 71 | 4x4 MIMO | 617-6000MHz | 4 dBi | OMNI DIRECTIONAL | Wi Fi 6E | GPS | IP 68 | -40° TO +80°

- OUTDOOR ANTENNA WORKS IN ANY WEATHER CONDITIONS, IP68
- ANTENNA PERFECTLY MATCHED WITH THE ERICSSON R980
- ALL ANTENNAS AND ERICSSON ROUTER INTEGRATED IN ONE ENCLOSURE
- GALVANIZED STEEL, WALL OR POLE MOUNTING BRACKET
- MADE IN **EUROPE**

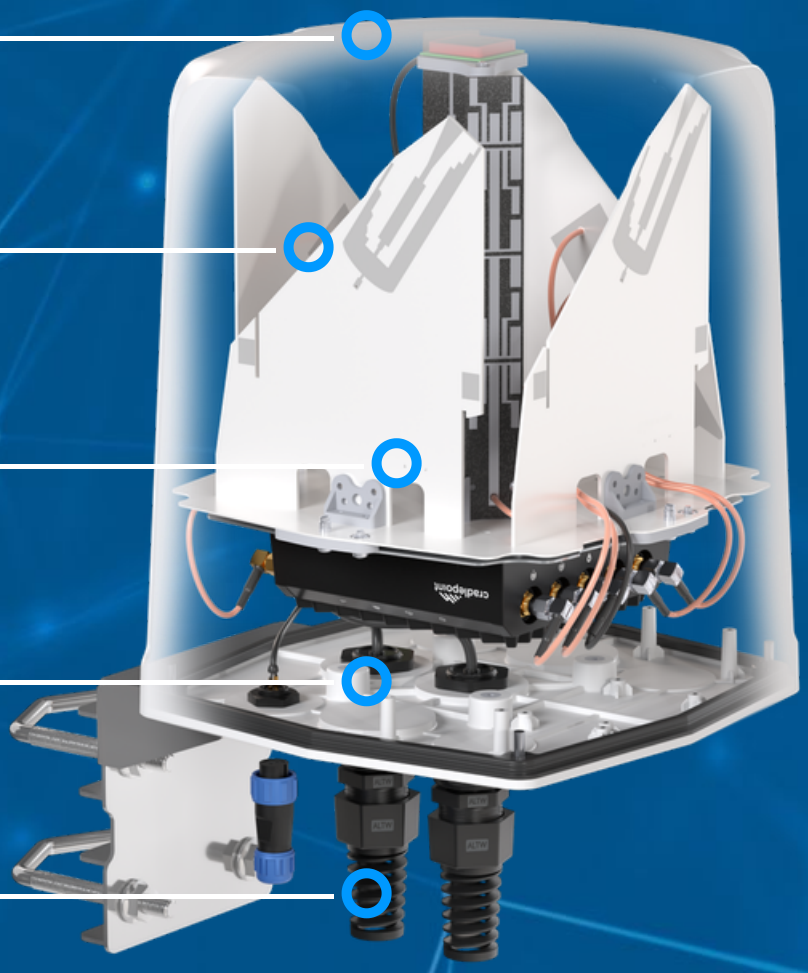

5G / LTE ANTENNA SPECIFICATION

FREQUENCY	0.617 - 0.960 GHz 1.6 - 3.0 GHz 3.0 - 5.0 GHz 5.0 - 6.0 GHz
MAX. GAIN	0.617 - 0.960 GHz : 2 dBi 1.6 - 3.0 GHz : 4 dBi 3.0 - 5.0 GHz : 4 dBi 5.0 - 6.0 GHz : 2 dBi
SUPPORTED LTE BANDS	1, 2, 3, 4, 5, 6, 7, 8, 9, 10, 12, 13, 14, 17, 18, 19, 20, 22, 23, 25, 26, 27, 28, 29, 30, 33, 34, 35, 36, 37, 38, 39, 40, 41, 42, 43, 44, 46, 47, 48, 49, 52, 53, 54, 65, 66, 67, 68, 69, 70, 71, 85, 103, 106, 111, 252, 254, 256
SUPPORTED 5G BANDS	n1, n2, n3, n5, n7, n8, n12, n13, n14, n18, n20, n25, n26, n28, n29, n30, n34, n38, n39, n40, n41, n46, n47, n48, n53, n54, n65, n66, n67, n68, n70, n71, n77, n78, n79, n80, n81, n82, n83, n84, n85, n86, n89, n90, n95, n97, n98, n99, n100, n101, n106, n252, n254, n256
VSWR	<2.00, max <3.00
BEAMWIDTH	360°/35° ±5°
POLARIZATION	Vertical
IMPEDANCE	50 Ω

Copyright © 2023, Wireless Instruments. Specifications and information given in this document are subject to change without prior notice.

WI-FI ANTENNA SPECIFICATION

FREQUENCY	2.4 - 2.5 GHz 5.0 - 7.2 GHz
GAIN	2.4 - 2.5 GHz: 6dBi 5 GHz: 7.5dBi 7 GHz: 7.5dBi
VSWR	< 1.50, max < 2.00
BEAMWIDTH	360°/25°
POLARIZATION	Vertical
IMPEDANCE	50 Ω

MECHANICAL SPECIFICATION

MATERIALS	ASA, aluminum, PTFE
CONNECTOR TYPE	2x RJ45 QuPS2
OUTER DIMENSIONS	210 x 210 x 254 mm 8.27 x 8.27 x 10 inch
INGRESS PROTECTION	IP68
OPERATING TEMPERATURE	From -40°C to 80°C From -40°F to 176°F
MAST DIAMETER	25-66 mm 0.98-2.60 inch
ENCLOSURE RECOMMENDED TIGHTENING TORQUE	0.5 - 0.7 Nm

Copyright © 2023, Wireless Instruments. Specifications and information given in this document are subject to change without prior notice.

FREQUENCY BANDS

LTE / 4G

617 MHz

1	2	3	4	5	7	8
9	10	12	13	14	17	18
19	20	22	25	26	27	28
29	30	33	34	35	36	37
38	39	40	41	42	43	44
47	48	49	52	53	65	66
67	68	69	71	85	103	106

6000 MHz

5G

617 MHz

n1	n2	n3	n5	n7	n8	n12
n13	n14	n18	n20	n25	n26	n28
n29	n30	n34	n38	n39	n40	n41
n47	n48	n53	n65	n66	n67	n71
n77	n78	n80	n81	n82	n83	n84
n85	n86	n89	n90	n95	n97	n98
n100	n101	n256				

6000 MHz

COMPATIBLE ROUTERS

VARIANT: -

Copyright © 2023, Wireless Instruments. Specifications and information given in this document are subject to change without prior notice.

PLOTS

5G/LTE VSWR

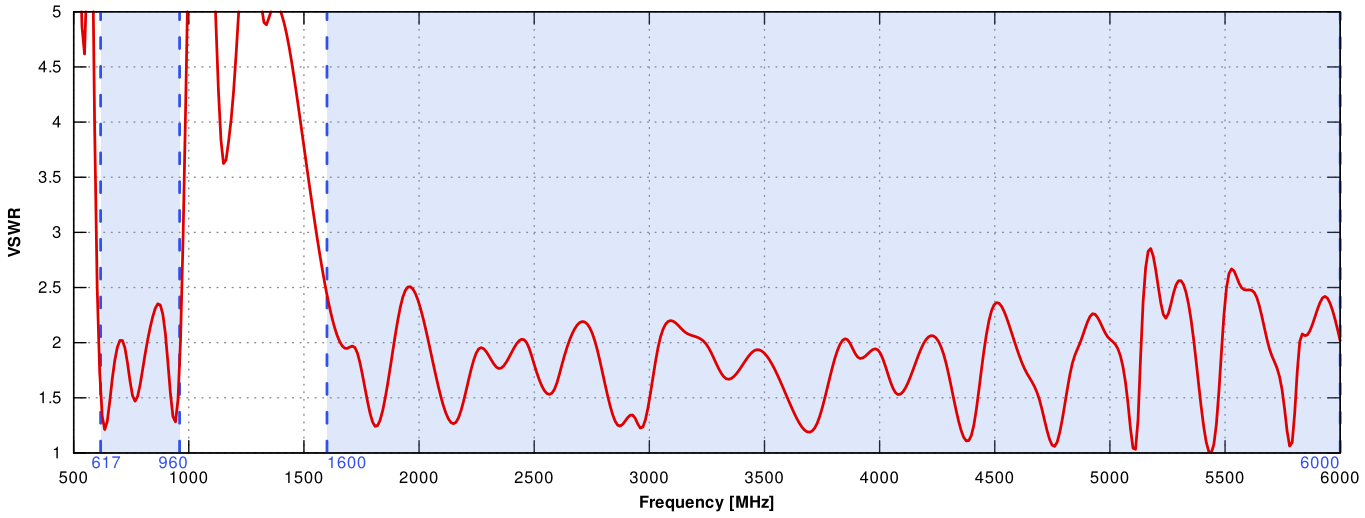

5G/LTE Gain

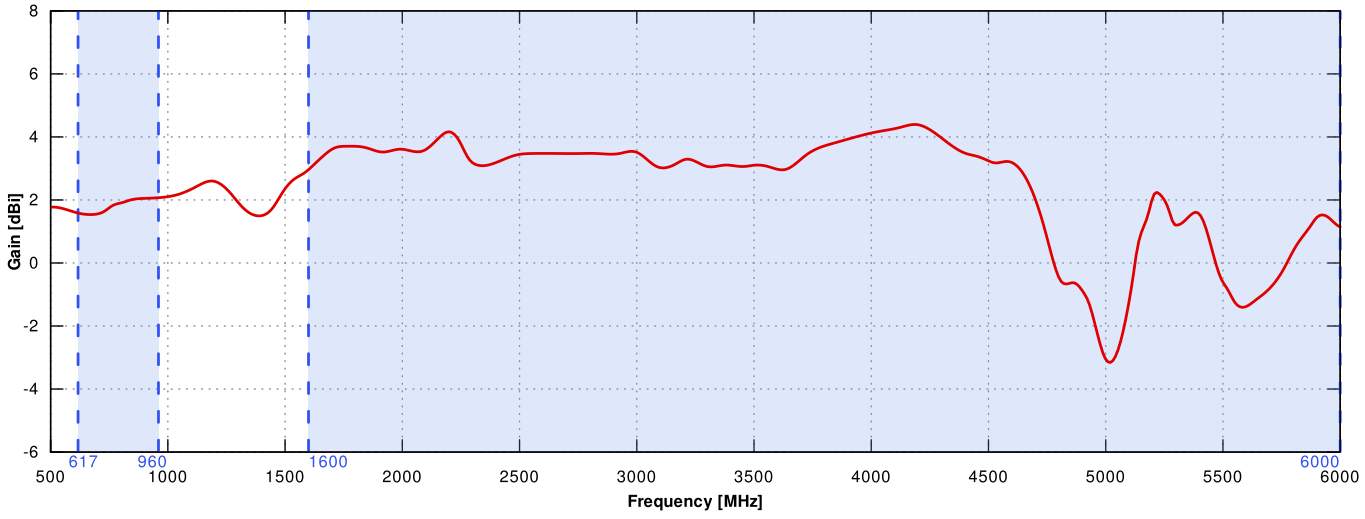

Copyright © 2023, Wireless Instruments. Specifications and information given in this document are subject to change without prior notice.

WI-FI VSWR

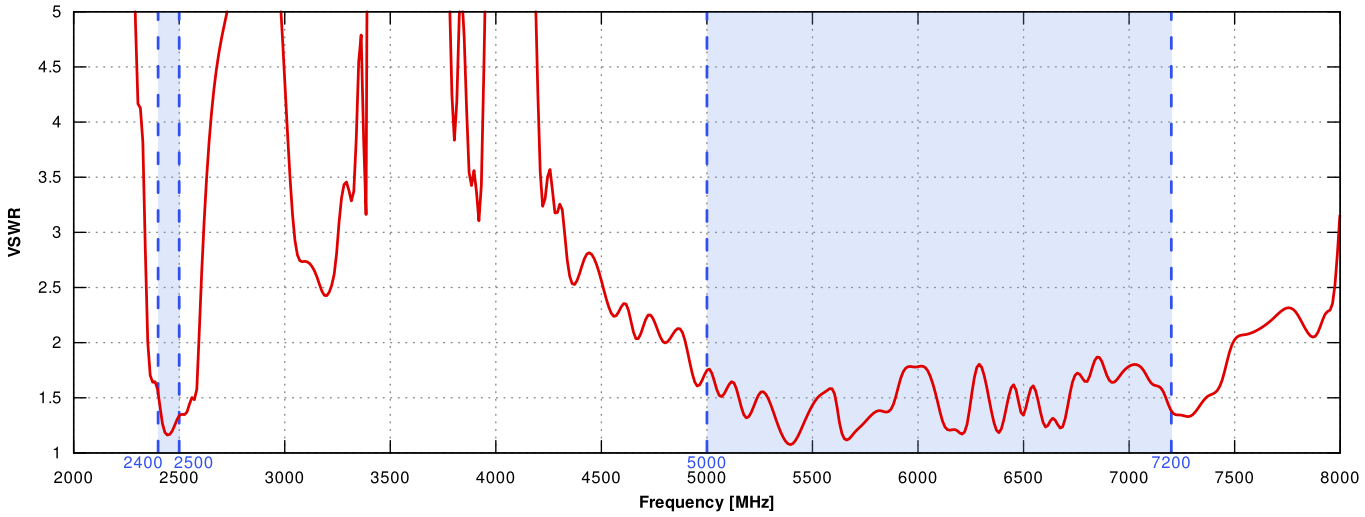

WI-FI Gain

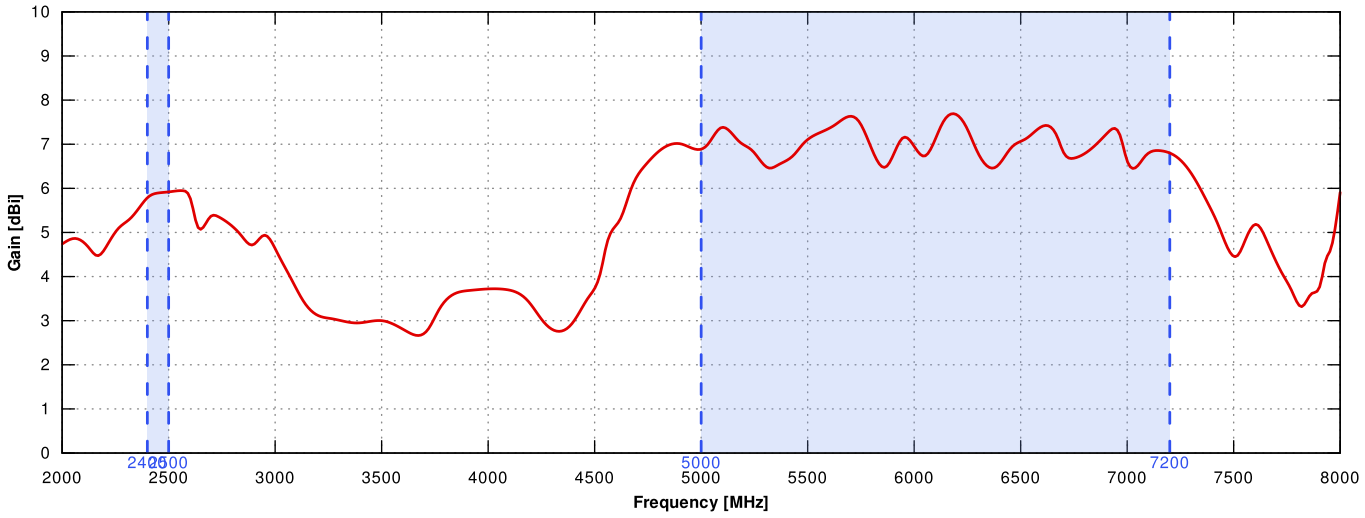

Copyright © 2023, Wireless Instruments. Specifications and information given in this document are subject to change without prior notice.

5G/LTE From 650MHz to 950MHz

ELEVATION

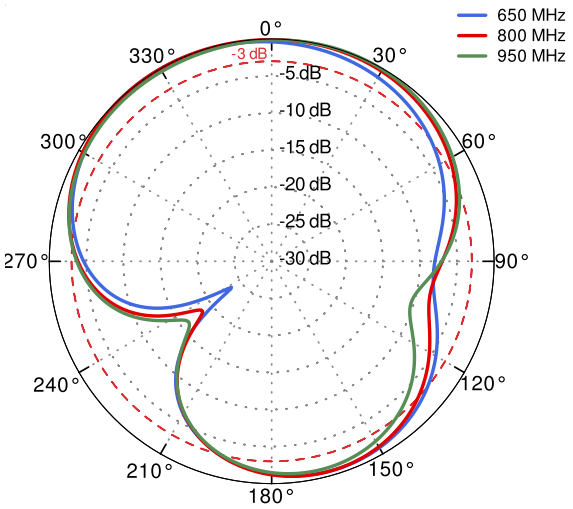

AZIMUTH

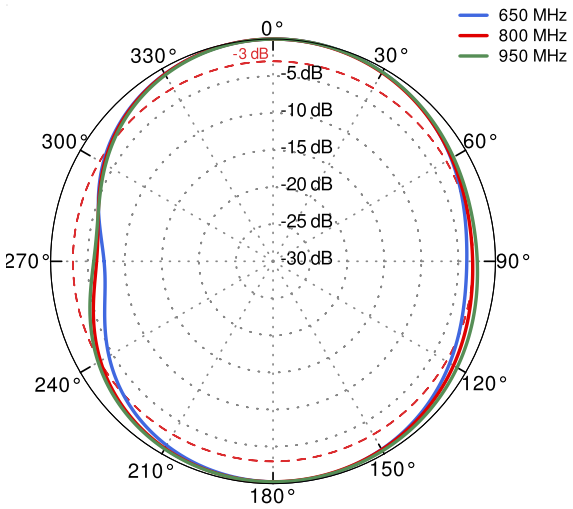

5G/LTE From 1710MHz to 2500MHz

ELEVATION

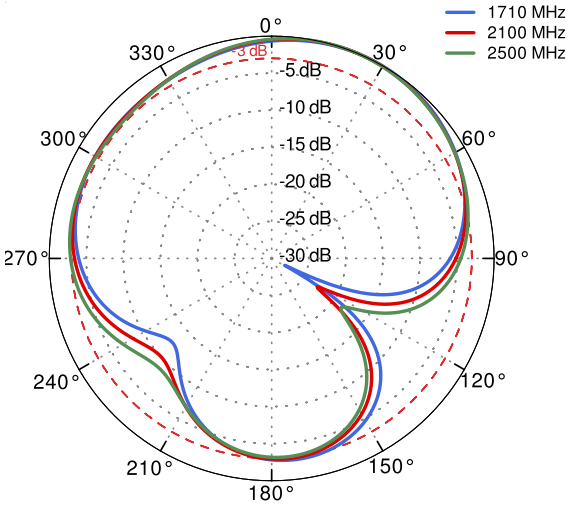

AZIMUTH

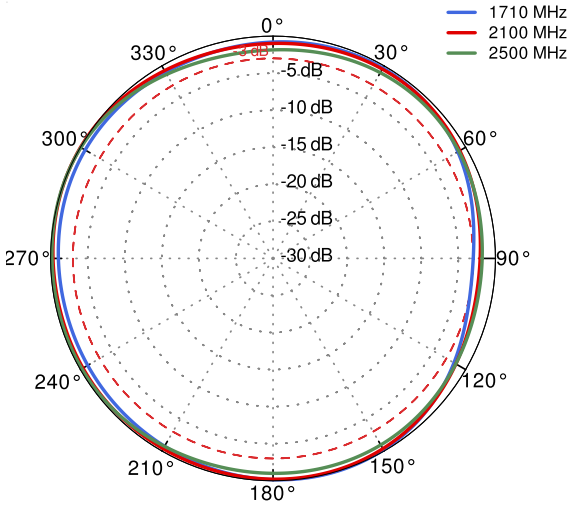

Copyright © 2023, Wireless Instruments. Specifications and information given in this document are subject to change without prior notice.

5G/LTE From 3300MHz to 4000MHz

ELEVATION

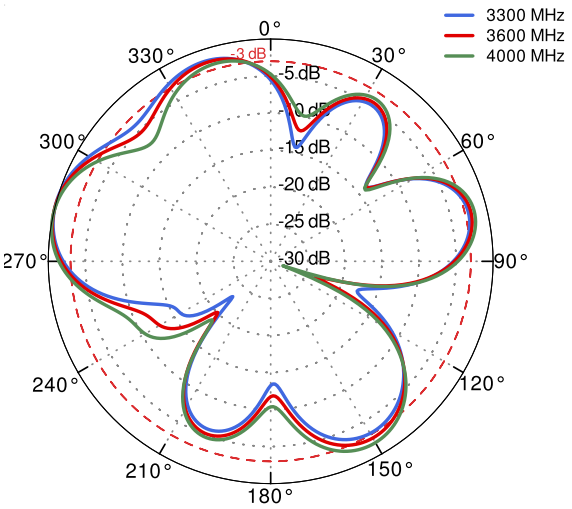

AZIMUTH

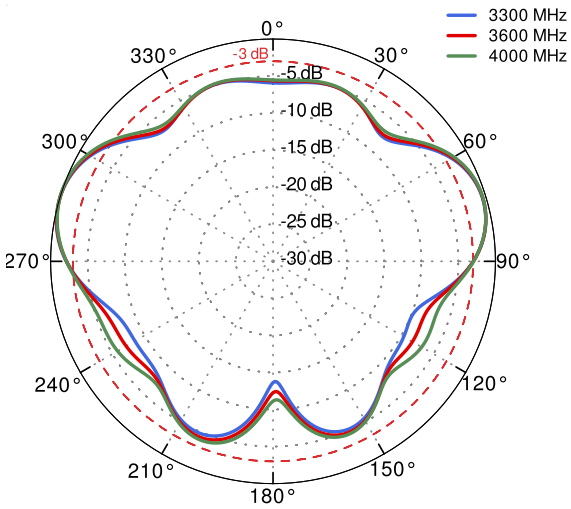

5G/LTE From 4500MHz to 5500MHz

ELEVATION

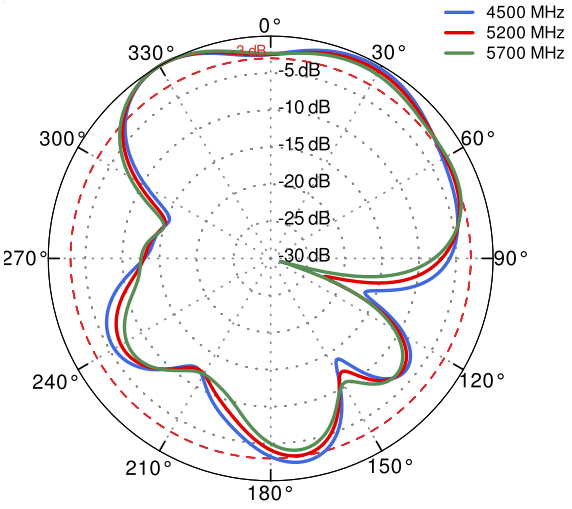

AZIMUTH

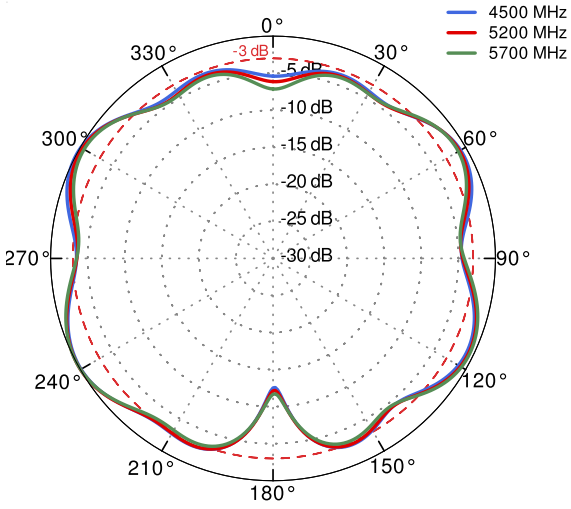

Copyright © 2023, Wireless Instruments. Specifications and information given in this document are subject to change without prior notice.

Wi-Fi From 2.4 GHz to 6.5 GHz

ELEVATION

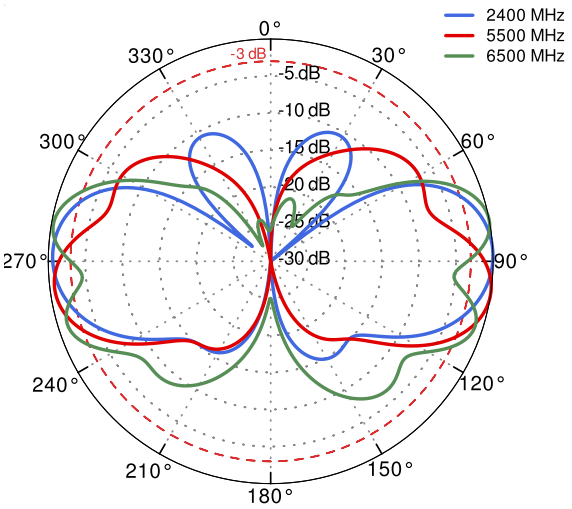

AZIMUTH

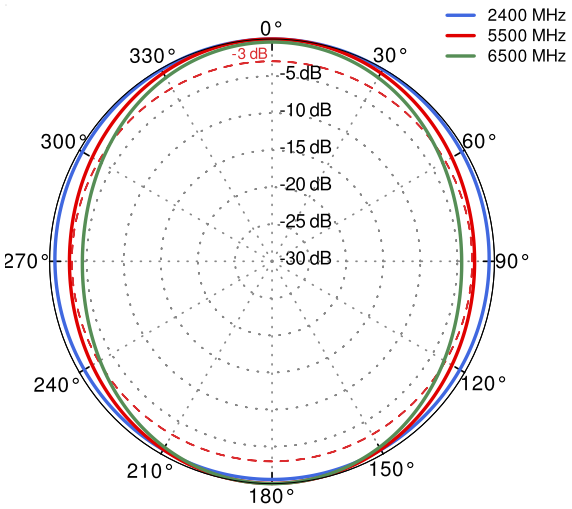

DIMENSIONS

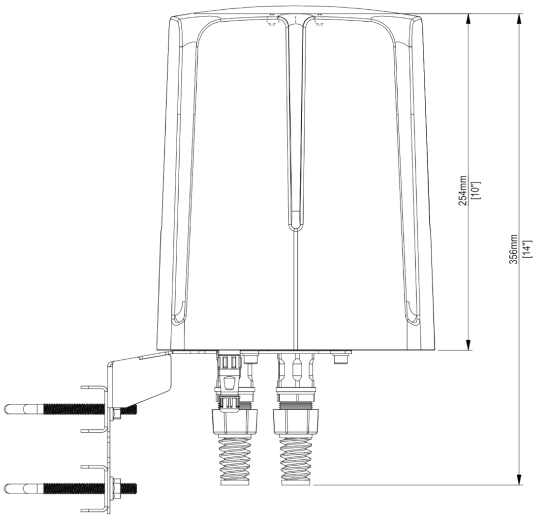

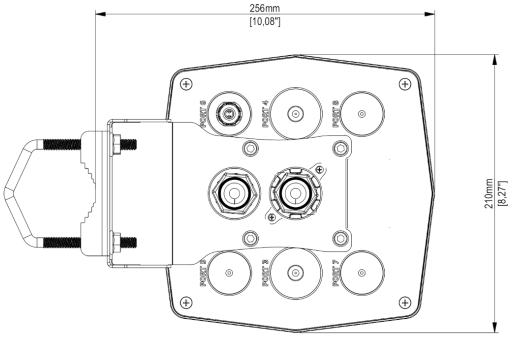

QuWireless
WWW.QUWIRELESS.COM

Sales email: sales@quwireless.com **Tel:** +48 513 900 416
Support email: support@quwireless.com **Website:** www.quwireless.com
Address: Wireless Instruments Sp. z o.o., ul. Kościuszki 27, 52-116 Iwiny, Poland

Copyright © 2023, Wireless Instruments. Specifications and information given in this document are subject to change without prior notice.